Operating Manual

Language	**English**
	Translation
Document No.	5.10018.02
Item No.	433998
Date	09.03.2012

be in motion be in motion

BAUMÜLLER

b maXX®
BM4-O-ECT-xx

Ethernet with EtherCAT for b maXX drive PLC

E	5.10018.02

Read the Operating Manual before starting any work!

Preliminary information

Note: Insofar as this document is identified as being preliminary information, the following applies:
this version is regarded as providing advance technical information to users of the described devices and their functions at an early enough time in order to adapt to any possible changes or expanded functionality.
This information must be regarded as being preliminary, as it has not yet passed through Baumüller's internal review process. In particular, this information is still subject to changes, thus no legal liability can be derived from this preliminary information. Baumüller assumes no liability for damages that might arise from this possibly faulty or incomplete version.
If you detect or suspect any content errors and/or major form errors in this preliminary information, we request that you notify the Baumüller support specialist responsible for you. Please provide us, via this employee, with your insights and comments so that we can take them into account and include them when transitioning from the preliminary information to the final information (as reviewed by Baumüller).
The conditions stipulated in the following section under "Obligatory" are invalid in case of preliminary information.

Obligatory

This Operating Manual is a part of the equipment/machine. This Operating Manual must be available to the operator at all times and must be in legible condition. If the equipment/machine is sold or moved another location, these Operating Manual must be passed on by the owner together with the equipment/machine.
After any sale of the equipment/machine, this original and all copies must be handed over to the buyer. After disposal or any other end use, this original and all copies must be destroyed.

When the present Operating Manual is handed over, corresponding sets of operating instructions of a previous version are automatically invalidated.
Please note that the specifications/data/information **are current values according to the printing date**. These statements are **not legally binding** with regard to measurements, computation or calculations.
Baumüller Nürnberg GmbH reserves the right, in developing its products further, to change the technical specifications and handling of it products concerned without prior notice.
No liability can be accepted concerning the correctness of these Operating Manualunless otherwise specified in the General Conditions of Sale and Delivery.

Ostendstr. 80 - 90
90482 Nuremberg
Germany

Tel. +49 9 11 54 32 - 0
Fax: +49 9 11 54 32 - 1 30

E-Mail: mail@baumueller.de
Internet: www.baumueller.de

Table of Contents

1

GENERAL

1.1 Information on the operating manual

This operating manual provides important information on handling the device. A prerequisite for safe work is compliance with all specified safety notes and procedural instructions.
Additionally, the valid accident prevention regulations and general safety regulations applicable to the scope of application the device must be complied with.

Read the operating manual, particularly the safety notes chapter, completely before beginning any work on the device. The operating manual is part of the product and must be kept accessible to personnel at all times in the immediate vicinity of the device.

1.2 Key to symbols

Warning notes

Warning notes are identified by symbols in this operating manual. The notes are introduced by signal words that express the extent of the danger.

It is imperative that these notes be complied with and are conscientiously regarded in order to prevent accidents, personal injury and material damage.

	**DANGER**! ....points out an imminent danger that will lead to severe injuries or death if not avoided.

	**WARNING!** ....points out a potentially dangerous situation that could lead to severe injuries or death if not avoided.

	**CAUTION!** ....points out a potentially dangerous situation that could lead to minor or slight injuries if not avoided.

	**CAUTION!** ....points out a potentially dangerous situation that could lead to material damage if not avoided.

Recommendations

	**NOTE!** ....highlights useful tips and recommendations, as well as information for efficient and problem-free use.

1.3 Limitation of liability

All specifications and notes in this operating manual were compiled taking into account the applicable standards and regulations, the state of the art and our knowledge and experience of many years.

The manufacturer assumes no liability for damages due to:

- Noncompliance with the operating manual
- Improper use
- Assignment of unemployed personnel

The actual scope of delivery can vary in case of optional equipment, laying claim to additional order options, or on account of the latest technical changes to the explanations and representations described herein.

The user bears the responsibility for performing service and initial operation in accordance with the safety regulations of the applicable standards and all other relevant governmental or local regulations concerning the dimensioning and protection of conductors, grounding, disconnectors, overcurrent protection, etc.

The person who carried out the mounting or installation is liable for any damage incurring when assembling or connecting the device.

1.4 Copyright protection

The operating manual must be treated confidential. It is exclusively for the personnel, who work with this device. Surrendering the operating manual to third parties without written permission of the manufacturer is not permitted.

NOTE!

The specific contents, text, drawings, images and other representations are copyrighted and subject to industrial property rights. Any prohibited usage is punishable by law.

b maXX® is a registered trademark of Baumüller Nürnberg GmbH.

1.5 Other applicable documents

Components of other manufacturers are integrated into the device. For these purchased parts, hazard assessments have been performed by the respective manufacturers. The compliance of the design construction with the applicable European and national regulations has been declared for the components by the respective manufacturers.

1.6 Spare parts

WARNING!

False or flawed spare parts can lead to damage, malfunction or complete failure, thus endangering safety.

Therefore:

- Only use original spare parts of the manufacturer.

Procure spare parts through an authorized dealer or directly from the manufacturer.

Also see ▹Appendix B - Accessories and Spare Parts◃ from page 67.

1.7 Disposal

Insofar as no take-back or disposal agreement has been made, please disassemble units correctly and properly recycle the constituent parts.

Also see ▹Disposal◃ from page 63.

1.8 Warranty provisions

The warranty provisions are stated in a separate document of the sales documents.

The devices described herein may only be operated in accordance with the stipulated methods, procedures and conditions. Anything else not presented here, including the operation of devices in mounted positions, is not permitted and must be cleared with the plant on a case-by-case basis. If the devices are operated in any other manner than as described within this operating manual, then all guarantee and warranty rights are rendered null and void.

1.9 Customer service

Our customer service is available to provide you with technical information.

Info on the responsible contact persons is available at all times via telephone, fax, email or the internet.

1.10 Terms used

The terms „Plug-in module EtherCAT-slave“ or „EtherCAT-slave module“ also will be used for the Baumüller product „BM4-O-ECT-01“ (option module EtherCAT-slave) in this manual.

The terms „Plug-in module Ethernet“ and „Plug-in module EtherCAT-Master“ or „EtherCAT-Master module“ also will be used for the Baumüller product "BM4-O-ECT-02" (option module Ethernet with EtherCAT-Master).

The terms „Plug-in module Ethernet“ and „Plug-in module Ether-CAT-Cluster“ or „Ether-CAT-Cluster module“ also will be used for the Baumüller product "BM4-O-ECT-03" (option module Ethernet with EtherCAT-Cluster) in this manual.

If the content refers to the product „BM4-O-ETH-xx“ in general, then the term „option module“ or „plug-in module“ will be used.

For the Baumüller product „**b maXX®**“ in this documentation also the term „device“ will be used.

Abbreviations, which are used see chapter ▹Appendix A - Abbreviations◃ on page 65.

1.11 Standards

The option modules EtherCAT-Slave for b maXX drive PLC BM4-O-ECT-01, Ethernet with EtherCAT-Master for b maXX drive PLC BM4-O-ECT-02 and Ethernet with Ether-CAT-Cluster for b maXX drive PLC BM4-O-ECT-03 correspond to requirements of EN 61131-2.

2

SAFETY

This section provides an overview of all of the important safety aspects for optimum protection of personnel as well as for the safe and problem-free operation.

2.1 Contents of the operating manual

Each person who is tasked with performing work on or with the device must have read and understood the operating manual before working with the device. This also applies if the person involved with this kind of device or a similar one, or has been trained by the manufacturer.

2.2 Changes and modifications to the device

In order to prevent hazards and to ensure optimum performance, no changes, additions or modifications may be undertaken on the device that have not been explicitly approved by the manufacturer.

2.3 Usage for the intended purpose

The device is conceived and constructed exclusively for usage compliant with its intended purpose described in this operating manual.

A device is considered as being used compliant with its intended purpose if all notes and information of this operating manual are adhered to.

WARNING!

Danger arising from usage for an unintended purpose!

Any usage that goes beyond the intended purpose and/or any non-compliant use of the device can lead to dangerous situations.

Therefore:

- Only use the device compliant with its intended purpose.
- Observe all specifications of this operating manual.
- Ensure that only qualified personnel work with/on this device.
- When configuring, ensure that the device is always operated within its specifications.
- Mount the device or the mounting rail on a wall that can sufficiently bear the load
- The device must always be operated within a control cabinet.
- Only operate the device in combination with components approved by Baumüller Nürnberg GmbH.
- Only operate the devices in secondary surroundings (e.g. an industrial environment). The device has been developed in such a manner that it fulfills the requirements of the category C3 according to IEC 61800-3:2005. The device is not intended to be connected to the public mains. To operate the device in primary surroundings of the category C2/C1 (residential, business and commercial areas, directly on a public low-voltage mains without an intermediate transformer), special measures to reduce the transient emissions (line-internal and radiated) must be provided for and certifiable by the system builder. Otherwise, EMC interference could occur without such additional measures. Whether a device described here can qualify for category C2/C1 even with additional measures cannot be guaranteed.

2.4 Responsibility of the operator

The device will be used in commercial areas. Thus, the proprietor of the device is subject to the legal work safety regulations.

Along with the notes on work safety in this operating manual, the safety, accident prevention and environmental protection regulations valid for the area of application of this device must be complied with. Whereby:

- The proprietor must inform himself about the applicable work health and safety regulations and ascertain, in a hazard assessment, any additional hazards that could arise from the special working conditions in the use area of the device. These must then be implemented in the form of operating instruction for operation of the device.
- This operating manual must be kept accessible to personnel working with the device at all times in the immediate vicinity of the device.
- The specifications of the operating manual must be adhered to completely and without exception.
- The device may only be operated in a technically faultless and operationally safe condition.

2.5 Protective devices

Protection rating	
BM4-O-ETC-0x	IP 20

All devices BM4-O-xxx-xx must be installed in an appropriate control cabinet to meet the protection ratings required in EN61800-5-1, chapter 4.2.3.3 (IP22).

DANGER!

Risk of fatal injury from electrical current!

There is an immediate risk of fatal injury if live electrical parts are contacted.

Therefore:

- The device must be operated inside a control cabinet that provides protection against direct contact of the devices and that meets at a minimum the requirements of EN 61800-5-1, Chapter 4.2.3.3.

2.6 Training of the personnel

WARNING!

Risk of injury due to insufficient qualifications!

Improper handling can lead to significant personal injury and material damage.

Therefore:

- Certain activities can only be performed by the persons stated in the respective chapters of this operating manual.

In this operating manual, the following qualifications are stipulated for various areas of activity:

- **Operating personnel**
  - The drive system may only be operated by persons who have been specially trained, familiarized and authorized.
  - Troubleshooting, maintenance, cleaning, maintenance and replacement may only be performed by trained or familiarized personnel. These persons must be familiar with the operating manual and act accordingly.
  - Initial operation and familiarization may only be performed by qualified personnel.
- **Qualified personnel**
  - Electrical engineers authorized by Baumüller Nürnberg GmbH, and qualified electricians of the customer or a third party who have learned to install and maintain Baumüller drive systems and are authorized to ground and identify electrical power circuits and devices in accordance with the safety engineering standards of the company.
  - Qualified personnel have had occupational training or instruction in accordance with the respective locally applicable safety engineering standards for the upkeep and use of appropriate safety equipment.

2.7 Personal protective equipment

The wearing of personal protective equipment is required when working in order to minimize health and safety risks.

- The protective equipment necessary for each respective type of work shall always be worn during work.
- The personal safety signs present in each working area must be observed.

Protective work clothing

should be snug-fitting work clothes, with low tearing resistance, narrow sleeves and with no extending parts.

No rings or chains may be worn.

Hard hat

protection against falling and flying objects.

Safety shoes

protection against heavy falling objects.

Protective gloves

to protect hands against friction, abrasion, puncturing or more severe injuries, as well as the contact with hot objects.

Wear for special tasks

Protective glasses

protection of the eyes against objects, which are flying around and against splashing liquids.

2.8 Special hazards

In the following section the residual risks are specified, which result from the hazard analysis.

Observe the safety notes listed here and the warning notes in the further chapters of this manual to reduce health risks and dangerous situations.

Electricity

DANGER!

Risk of fatal injury from electricity!

There is an immediate risk of fatal injury if live electrical parts are contacted. Damage to the insulation or individual components can be life-threatening.

Therefore:

- Switch off the electrical power immediately in case of damage to the power supply insulation.
- Only allow work on the electrical system to be performed by qualified personnel.
- Switch off the current when any kind of work is being performed on the electrical system and secure it against being started again.

Danger from residual energy

DANGER!

Risk of fatal injury from electrical current!

After separation of the device from the mains parts under voltage as e. g. power connections may only be touched if the capacitors in the device have been discharged.

Therefore:

- Do not touch before taking the discharge time of the capacitors and the electrically live parts into account.
- Pay attention to corresponding notes on the equipment.
- If additional capacitors are connected to the intermediate circuit, the DC-link discharge can take much longer. In this case, the necessary waiting period must be determined itself or a measurement made as to whether the equipment is de-energized.

Moving components

WARNING!

Risk of injury from moving components!

Rotating components and/or those moving linearly can result in severe injury.

Therefore:

- Do not in intervene in moving components during operation.
- Do not open any covering during operation.
- The amount of residual mechanical energy depends on the application. Powered components still turn/move for a certain length of time even after the power supply has been switched off. Ensure that adequate safety measures are taken.

2.9 Noise level of the device

The option module does not make any noise.

2.10 Fire fighting

DANGER

Risk of fatal injury from electrical current!

There is a risk of electric shock if an electrically-conductive, fire-extinguishing agent is used.

Therefore:

- Use the following fire-extinguishing agent:

ABC powder / CO_2

2.11 Electrical safety

The option module is laid out for degree of pollution 2 accordant to EN 50178. This means, that only non-conductive pollutions may occur during operating time. Short-term conductivity by condensation is permitted only, if the control is out of operation.

WARNING!

Risk of injury due to conductive pollutions!

No conductive pollutions may occur during operating time.

Therefore:

- If necessary, assure with additional measures that the degree of pollution 2 is not exceeded before installing the system.

2.11.1 Notes according to the power supply

WARNING!

Risk of injury from electrical current!

Only those devices may be connected to the option module, which ensure a reliable electrical isolation to the 230 V system.

The power-supply unit for that generates the 24 volt-supply must be in accordance with the requirements for PELV referring to EN 50178.

2.12 Safety equipment

WARNING!

Risk of fatal injury due to non-functional safety equipment!

Safety equipment provides for the highest level of safety in a facility. Even if safety equipment makes work processes more awkward, under no circumstances may they be circumvented. Safety can only be ensured by intact safety equipment.

Therefore:

- Before starting to work, check whether the safety equipment in good working order and properly installed.

2.13 Rules of conduct in case of danger or accidents

Preventive measures

- Always be prepared for accidents or fire!
- Keep first-aid equipment (e.g. first-aid kits, blankets, etc.) and fire extinguishers readily accessible.
- Familiarize personnel with accident alarm, first aid and rescue equipment.

And if something does happen: respond properly

- Stop operation of the device immediately with an EMERGENCY Stop.
- Initiate first aid measures.
- Evacuate persons from the danger zone.
- Notify the responsible persons at the scene of operations.
- Alarm medical personnel and/or the fire department.
- Keep access routes clear for rescue vehicles.

2.14 Signs and labels

The following symbols and information signs are located in the working area. They refer to the immediate vicinity in which they are affixed.

WARNING!

Risk of injury due to illegible symbols!

Over the course of time, stickers and symbols on the device can become dirty or otherwise unrecognizable.

Therefore:

- Maintain all safety, warning and operating labels on the device in easily readable condition

Electrical voltage

The working area, which is marked with this sign, is authorized for qualified personnel to work in it, only

Unauthorized persons may not touch the marked work equipment.

DANGER!

Risk of fatal injury from electrical current!

Discharge time > 1 minute

Stored electrical current!

Therefore:

- Do not touch before taking into account the discharge time of the capacitors and electrically live parts.
- Heed corresponding notes on the equipment.
- If additional capacitors are connected to the intermediate circuit, the intermediate circuit discharge can take a much longer time. In this case, the necessary waiting period must itself be determined or a measurement made as to whether the equipment is de-energized. This discharge time must be posted, together with an IEC 60417-5036 (2002-10) warning symbol, on a clearly visible location of the control cabinet.

3

PACKAGING AND TRANSPORTATION

Every Baumüller unit is packed for shipping in such a way, that a transportation damage is unlikely.

3.1 Transportation

The plug-in modules are packed at the factory in accordance with the order.

- Avoid severe vibrations and jolts (max. 1 g).
- Avoid static discharges to the plug-in module's electronic components.
- Do not remove the plug-in module from its protective packaging until just before you intend to mount it.

3.2 Unpacking

After receiving the unit while it is still packaged:

- Check whether there is any visible damage!

If there is:

- Complain to the delivery company. Have your complaint confirmed in writing and contact immediately your nearest Baumüller Nürnberg GmbH subsidiary.

CAUTION!

Danger from electrostatic discharge

If you touch the plug-in module, and especially its electronic components, and subject them to electrostatic discharges, the module can be damaged or even totally destroyed.

Therefore

- When handling the plug-in module, always observe the regulations and information on handling electrostatically sensitive components

If no damage is visible:

- Open the unit's packaging.
- Check the scope of supply against the delivery note.

The scope of supply is:

- BM4-O-ECT-xx option module with EtherCAT
- Operating manual

- Complain to your local Baumüller subsidiary if you find damage or if the delivery is not complete.

3.3 Disposing of the packaging

The packaging consists of cardboard and plastic.

- Observe local disposal regulations if you intend to dispose of the packaging.

3.4 Observe during transportation

The unit was packaged at the manufacturer's plant for initial transportation. If you have to transport the unit at a later date, please note the following points:

- Use the original packaging material

or

- Use packaging that is suitable for electrostatic sensitive devices.

Ensure that the transportation conditions are fulfilled during the total transportation, see ▹Appendix D - Technical Data◃ on page 73,

4

DESCRIPTION OF THE OPTION MODULE ETHERCAT

In this chapter we describe the option module EtherCAT for b maXX drive PLC and explain the type code on the plug-in module.

4.1 Structure

4.1.1 Option module EtherCAT-Slave BM4-O-ECT-01

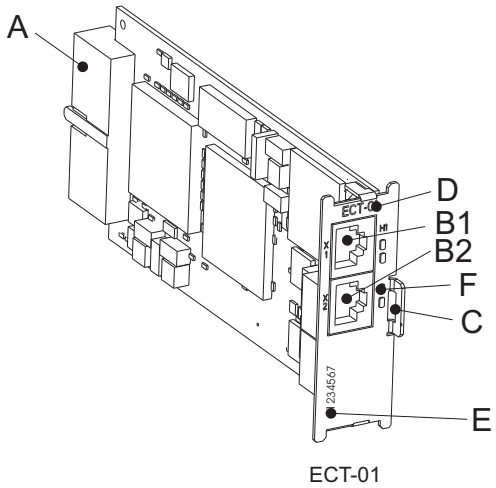

Figure 1: Plug-in module EtherCAT-Slave

A = Plug connector (back-mounted)
B1 = Socket RJ45 EtherCAT input
B2 = Socket RJ45 EtherCAT output
C = Grip
D = Type code
E = Serial number
F = LEDs

4.1.2 Option module Ethernet with EtherCAT-Master BM4-O-ECT-02

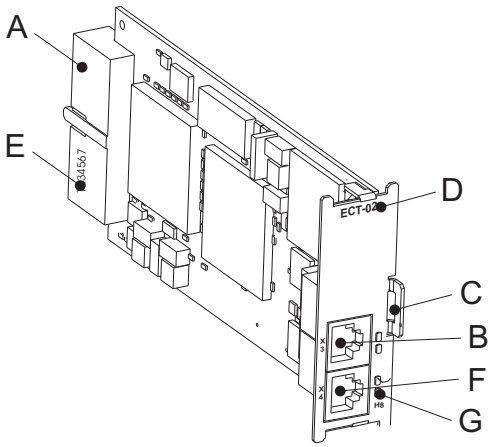

A = Plug connector (back-mounted)
B = Socket RJ45 EtherCAT
C = Grip
D = Type code
E = Type plate
F = Socket RJ45 Ethernet
G = LEDs

Figure 2: Plug connector Ethernet with EtherCAT-Master

4.1.3 Option module Ethernet with EtherCAT-Cluster BM4-O-ECT-03

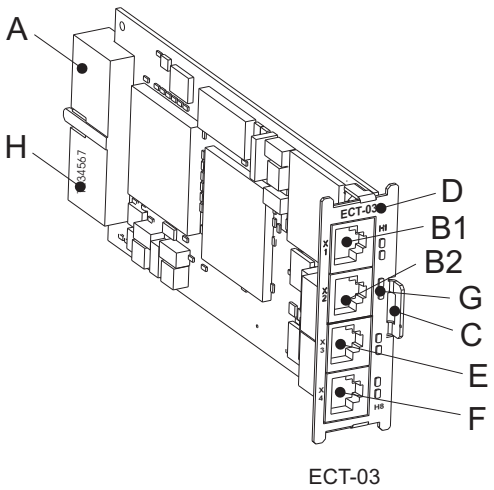

A = Plug connector (back-mounted)
B1 = Socket RJ45 EtherCAT-Slave input
B2 = Socket RJ45 EtherCAT-Slave output
C = Grip
D = Type code
E = Socket RJ45 EtherCAT-Master
F = Socket RJ45 Ethernet
G = LEDs
H = Type plate

Figure 3: Plug connector Ethernet with EtherCAT-Cluster

4.1.4 Slot for all versions of the option module

Slot G is provided for the option module BM4-O-ECT-xx.

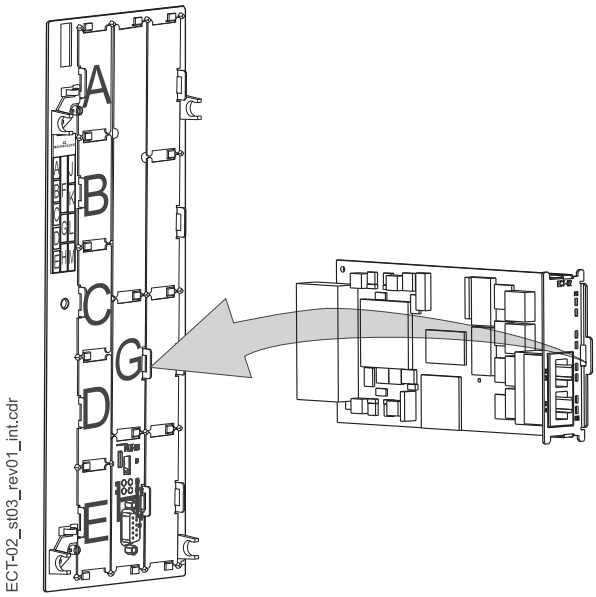

Figure 4: Option module EtherCAT, slot G

NOTE!

Slot J may not be used for module EtherCAT for b maXX drive PLC. There is a risk of damaging the module thereby.

NOTE!

If a plug-in module is plugged into an unsuitable slot, it will not work. We have taken measures to ensure that the plug-in module is not damaged thereby.

4.2 Danger zones

The greatest danger is represented by the basic unit b maXX 4400, into which the module was plugged. Observe all the safety instructions of the b maXX 4400 basic unit. The following figure gives an overview of the danger zones in the plug-in module.

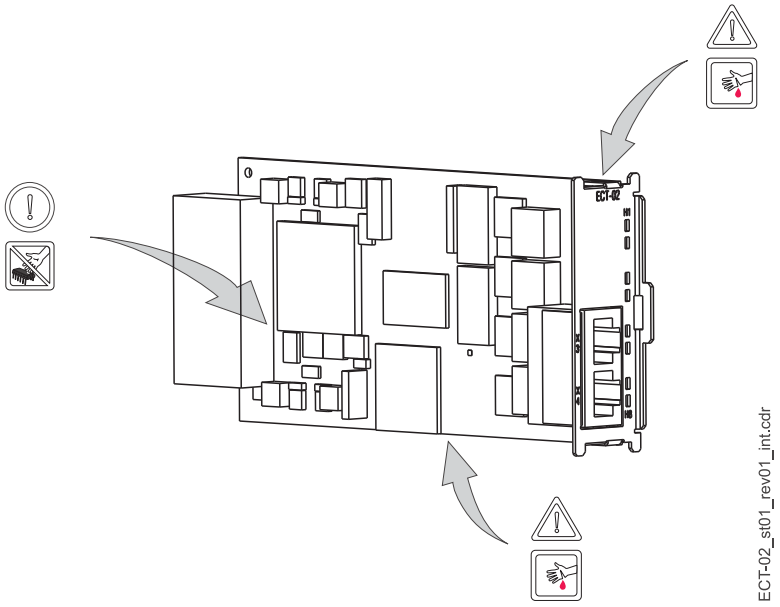

Figure 5: Danger zones

4.3 Identification of the option module - type code

The type code is on the type plate („E“ in ▹Figure 2◃ on page 26 or „H“ in ▹Figure 3◃ on page 26) of the plug-in module.

HINWEIS!

This type key is for the option module EtherCAT of the series b maXX 4400. Other plug-in modules have their own type key.

BM4 - O - ECT - XX - YY- ZZ	Device generation, in which the plug-in module can be integrated.
BM4 - O - ECT - XX - YY- ZZ	Option module
BM4 - O - ECT - XX - YY - ZZ	Plug-in module type (for b maXX drive PLC)
BM4 - O - ECT - XX - YY - ZZ	Version module 01: EtherCAT-Slave 02: EtherCAT-Master 03: EtherCAT-Cluster
BM4 - O - ECT - XX - YY - ZZ	Version hardware
BM4 - O - ECT - XX - YY - ZZ	Version software

This type code is located on the plug connector on the rear („H“ in ▹Figure 3◃ on page 26). The type code contains the plug-in module’s basic data. On the basis of the type code more data will be found in the chapter „Technical Data“. Refer to ▹Appendix D - Technical Data◃ from page73, for a list of all technical data.

5

ASSEMBLY AND INSTALLATION

In this chapter, we will describe mechanical assembly and electrical installation of the option module for b maXX drive PLC.

Assembly/installation consists of the following steps:

1 Mount the plug-in module.

2 Connect the plug-in module to the connecting cables and the power supply.

5.1 General safety regulations

- Observe the information in chapter ▹Safety◃ from page 13.
- Observe all areas on the b maXX unit that could be dangerous when you are carrying out assembly.
- The figure below gives you an overview of the danger zones on the plug-in module.

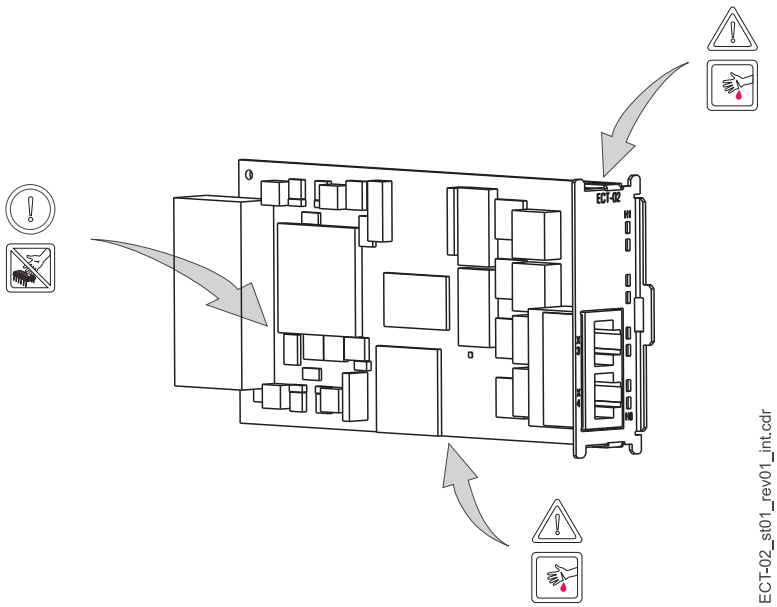

Figure 6: Danger zones

5.2 Requirements to the executing personnel

DANGER!

Risk of fatal injury from electric current!

The unit and environment in the control cabinet may carry dangerous voltages.

Therefore:

- Before starting any work, ensure that the unit and its environment are free of voltage.
- Observe the relevant safety regulations when handling high-voltage units.
- Ensure that only qualified personnel assembles and installs this module.

Qualified personnel is considered to be people whose training, experience and knowledge of relevant standards and regulations, accident prevention regulations and conditions in the plant has led to them being authorized by the plant safety manager to carry out activities that are needed in each case while recognizing and avoiding any possible hazards that might arise. The qualifications that are necessary for working with the unit include, for example:

- Trained or instructed in accordance with the safety standards in the care and use of appropriate safety equipment

5.3 Preparation

➲ Make sure that the correct plug-in module is used on the basis of the type code on the type plate (see „E“ in ▹Figure 8◃ or „H“ in ▹Figure 9◃).

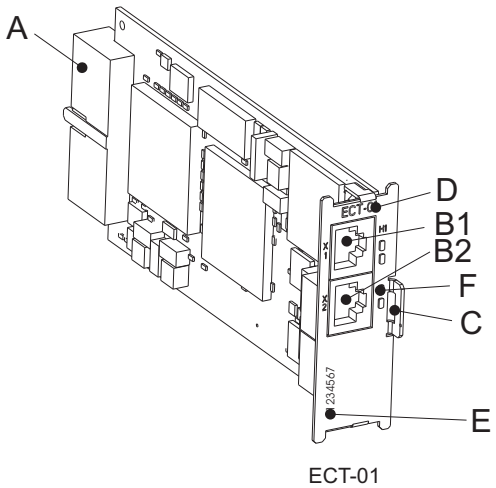

A = Plug connector (back-mounted)
B1 = Socket RJ45 EtherCAT input
B2 = Socket RJ45 EtherCAT output
C = Grip
D = Type code
E = Serial number
F = LEDs

Figure 7: Plug connector module EtherCAT-Slave

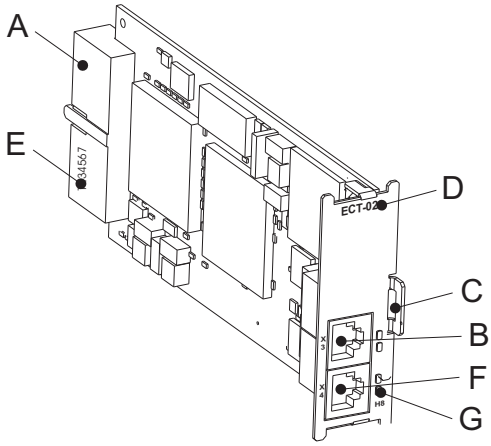

A = Plug connector (back-mounted)
B = Socket RJ45 EtherCAT
C = Grip
D = Type code
E = Type plate
F = Socket RJ45 Ethernet
G = LEDs

ECT-02

Figure 8: Option module Ethernet with EtherCAT-Master for b maXX drive PLC

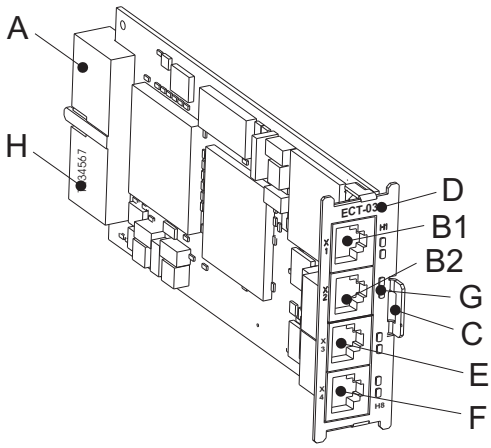

A = Plug connector (back-mounted)
B1 = Socket RJ45 EtherCAT-Slave input
B2 = Socket RJ45 EtherCAT-Slave output
C = Grip
D = Type code
E = Socket RJ45 EtherCAT-Master
F = Socket RJ45 Ethernet
G = LEDs
H = Type plate

ECT-03

Figure 9: Plug-in module Ethernet with EtherCAT-Cluster

- Determine the correct slot (see ▷Figure 10◁ on page 34).

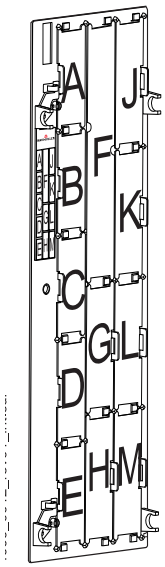

	Function module									Option module														
	BM4-F-ENC-XX (encoder 1 for motor control recommended))	BM4-F-ENC-XX (encoder 2)	BM4-F-AIO-01 (analog I/O)	BM4-F-AIO-02/03 (analog I/O)	BM4-F-DIO-XX (digital I/O)	BM4-F-FIO-XX (quick digital I/O)	BM4-F-IEE-XX (incremental encoder emulation)	BM4-F-SIE-XX (SSI-encoder emulation)	BM4-F-CAN-01 (CANsync-Slave) **i. Vorb.**	BM4-O-SER-XX (Sercos-Slave)	BM4-O-CAN-05 (CANsync-Slave)	BM4-O-PRO-01 (Profibus-Slave)	BM4-O-CAN-03 (CANopen-Slave)	BM4-O-DNT-XX (DISC-NT-Slave-Modul)	BM4-O-PLC-XX (SPS)	BM4-O-CAN-06* (CANsync-Master)	BM4-O-CAN-04* (CANopen-Master)	BM4-O-IEI-XX* (incremental encoder emulation)	BM4-O-ETH-01* (Ethernet)	BM4-O-ETH-02* (Ethernet + CANopen Master)	BM4-O-ECT-01 (EtherCAT-Slave) for controllerr	BM4-O-ECT-01* (EtherCAT-Slave) for PLC	BM4-O-ECT-02* (Ethernet + EtherCAT-Master)	BM4-O-ECT-03* (Ethernet + EtherCAT-Cluster)
A	**X**	-	-	-	o	o	-	o	-	-	-	-	-	-	-	-	-	-	-	-	-	-	-	-
B	-	**X**	-	-	o	o	-	**X**	-	-	-	-	-	-	-	-	-	-	-	-	-	-	-	-
C	-	-	-	-	o	o	**X**	-	**X**	-	-	-	-	-	-	-	-	-	-	-	-	-	-	-
D	-	-	-	-	**X**	**X**	-	-	-	-	-	-	-	-	-	-	-	-	-	-	-	-	-	-
E	-	-	**X**	**X**	o	o	-	-	-	-	-	-	-	-	-	-	-	-	-	-	-	-	-	-
F Controller unit, permanently installed																								
G	-	-	-	-	-	-	-	-	-	o	o	o	o	o	o	**X**	**X**	**X**	**X**	**X**	**o**	**X**	**X**	**X**
H	-	-	-	-	-	-	-	-	-	**X**	**X**	**X**	**X**	**X**	**X**	-	o	-	o	o	**X**	o	o	o
J	-	-	-	-	-	-	-	-	-	-	**P**	**P**	**P**	-	-	o	o	o	o	o	**-**	**-**	-	-
K	-	-	-	-	-	-	-	-	-	-	**P**	**P**	**P**	-	-	o	o	o	o	o	**-**	**o**	o	o
L	-	-	-	-	-	-	-	-	-	-	**P**	**P**	**P**	-	-	o	o	o	o	o	**-**	**o**	o	o
M	-	-	-	-	-	-	-	-	-	-	**P**	**P**	**P**	-	-	o	o	o	o	o	**-**	**o**	o	o

X: preferred slot
Baumüller Nürnberg GmbH recommends, in order to reach the highest functional range, to insert the plug-in modules into these slots

o: possible slot
only if the preffered slot is occupied, we recommend, in order to reach the highest functional range, to insert the plug-in modules into this slot.

P: only possible, if on slot G or H a PLC module (PLC) is plugged and the PLC (and not the controller) executes the communication to the field bus slave module. .

-: not possible - card doesn't work in this slot.

* Precondition for these cards is an inserted PLC module

Steckkarten_Rev17_d

Figure 10: Slot combinations

NOTE!

Slot J may not be used for the module EtherCAT. The module could be damaged.

5.4 Assembly

1 Switch off the b maXX 4000 unit and secure it from being unintentionally restarted during assembly.

DANGER!

Risk of fatal injury by electrical current!

The Device and environment in the control cabinet may carry dangerous voltages.

Therefore:

- Before starting any work, ensure that the unit and its environment are free of voltage.
- Observe the relevant safety regulations when handling high-voltage-carrying units.

2 Pull the cover off towards you from the controller part; now the slots can be seen.

3 Search for the appropriate slot (G) on the controller part.

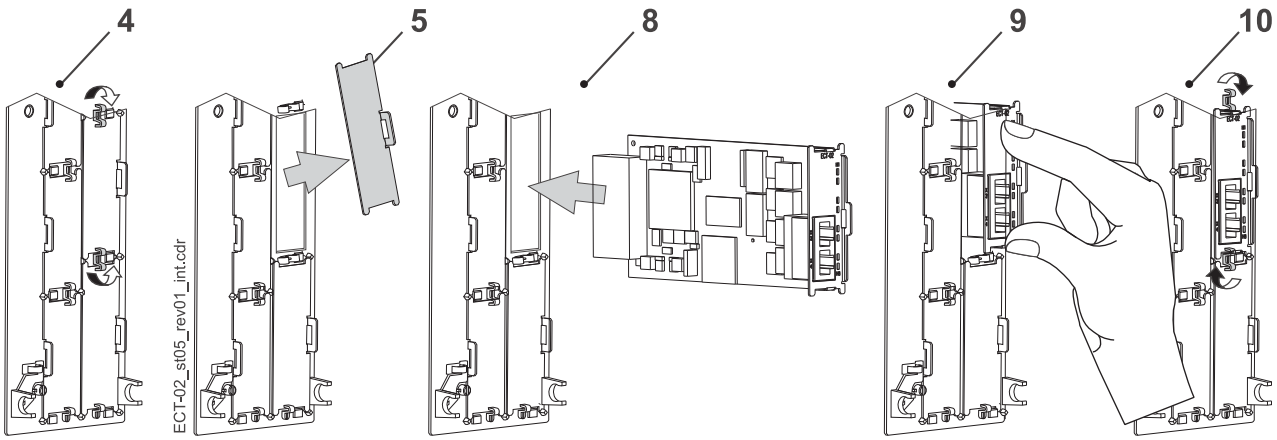

Figure 11: Assembly

4 Turn the spagnolet locks above and below by 90°. Now the spagnolet locks are horizontal.

5 Take out the front panel cover towards the front. Keep this cover. If you remove plug-in cards, the unit must be closed again using the cover.

CAUTION!

Danger from electrostatic discharge!

The EtherCAT module contains ESD-sensitive parts.

Therefore

- Observe the described ESD-measures when handling the plug-in module.
- Touch the plug-in module at its handle only (see „C in ▹Figure 7◃ on page 32).

6 Observe the described ESD measures when handling the modules.

7 Remove the option module for b maXX drive PLC from the transportation packaging: Avoid contact with the plug-in module's electronic components.

8 Set the DIP-switches SW 13000 and SW 13100, according to your project requirements (your ProMaster project).

	Dip-switch: **8 7 6 5 4 3 2 1** value 0 0 0 0 1 0 0 1 = 9

The DIP switch setting may affect the module's address. Also see ▹Coding switch SW13000, SW13100◃ from page 44.

9 Plug the option module for b maXX drive PLC into the slot's guide rails. The handle must face the same way as the other handles in this slot rail slot rail (in the case: the right-hand side).

10 Keep pressing two fingers on the front panel until you feel the card engage in the end position inside the unit.

11 Turn the spagnolet locks above and below this slot by 90° to the vertical position (locked position).

NOTE!

If you only want to replace the option module for b maXX drive PLC within the scope of repairs with a card of the same type, the rest of the procedure is considerably shorter. In this case, you only need to restore the connections to the module, put the front cover back on and switch the unit on again.

This completes assembly of the option module for b maXX drive PLC. Connecting lines and commissioning is shown in the following sections.

5.5 Installation

The option module for b maXX drive PLC is cabled at installation.

5.5.1 Connection diagram

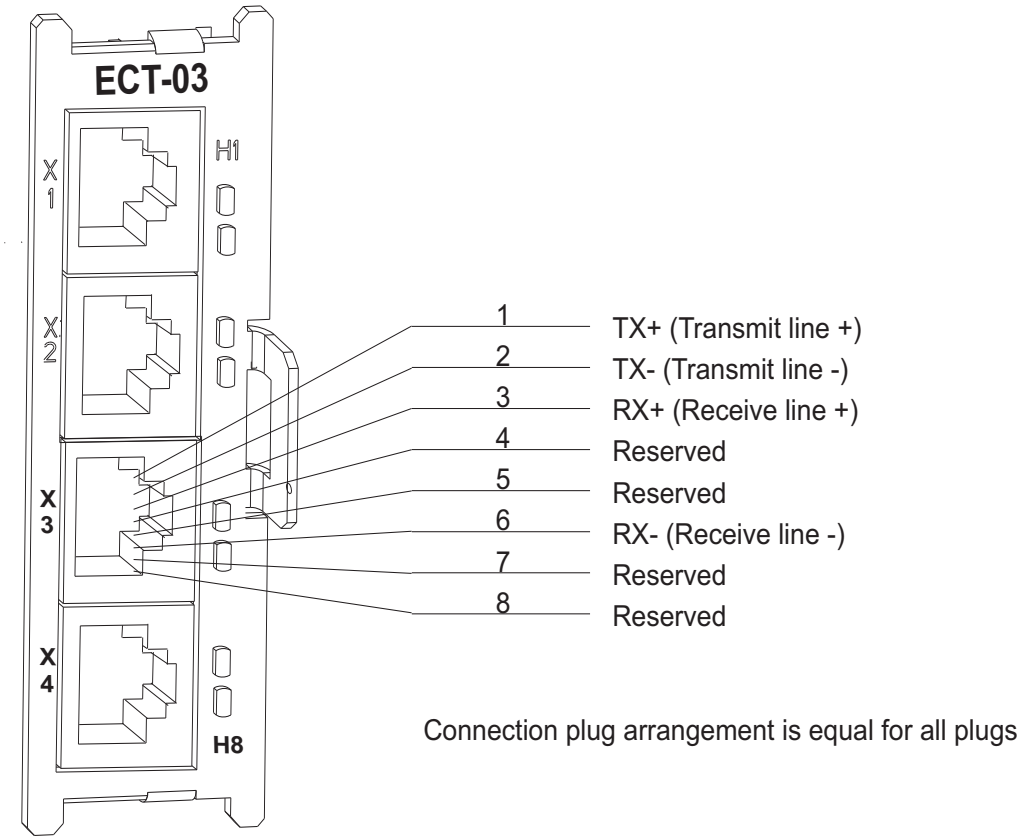

Figure 12: Connection diagram for Ethernet with EtherCAT-Cluster for b maXX drive PLC

NOTE!

The assignment of the X1 to X4 plugs is the same for the option modules ECT-01, ECT-02 and ECT-03.

5.5.2 Requirements to the electrical connection

CAUTION!

Danger from electrical voltage!

If you are not able to ensure the plug-in module's requirements of the electrical connection, the plug-in module can be damaged or destroyed.

Therefore

- Ensure that the specified connection values in the technical data are complied with and that the connections are made in accordance with the specification of EtherCAT.
- Avoid short-circuits between inputs/outputs. In the case of a short-circuit between inputs/outputs, the plug-in module can be destroyed.
- Avoid, mixing up the polarity of the inputs.

To be able to comply with Standard EN 60 204-1 (Electrical Equipment of Machines), the cables that are suggested in the standard must be used. The connectors may not fall out,

otherwise there is a risk of short-circuits or external voltages, etc.

➲ Ensure EMC-appropriate layingare avof the connection cables.

5.5.3 Requirements of the connection cable

The following cables have been released from Baumüller for use:

- Ethernet-cable K-ETH-33-0-xx and crossover adapter or -coupling (see appendix ▹B.1.1 Ethernet-cable◃ from page 67)
- EtherCAT-cable K-ETH-33-0-xx (see appendix ▹B.1.2 EtherCAT-cable◃ from page 68)

5.5.4 Sequence of the installation

➲ Make sure that the b maXX device is de-energized.

➲ Remove the front cover from the device.

- The option module for b maXX drive PLC is in slot G, see ▹Figure 10◃ on page 34.

ECT-01:

➲ Connect the 8-pole RJ45-connectors X1 (and X2) on the front plate of the option module with the EtherCAT communication cable. Connection assignment see ▹D.3 Pin assignment RJ45-connector for EtherCAT◃ on page 74 (cable outlet downwards).

ECT-02:

➲ Connect the 8-pole RJ45-connector X4 on the front cover of the option module with the Ethernet communication cable (CAT5-twisted pair). Connection assignment see (CAT5-twisted-pair), ▹D.2 Pin assignment RJ45-connector for Ethernet◃ on page 74

(cable outlet downwards).
The option module Ethernet detects the network types 10BaseT (10 Mbit) and 100BaseTX (100 Mbit) during the running operation and automatically adjusts. The option module also can be connected directly to a PC, optional to the connection with a star coupler (hub or switch). In this case, a cross-link cable must be used however.

- Connect the 8-pole RJ45-connector X3 on the front cover of the EtherCAT-master option module for b maXX drive PLC with the EherCAT communication cable. Connection assignment see ▹D.3 Pin assignment RJ45-connector for EtherCAT◃ on page 74 (cable outlet downwards).

ECT-03:

- Carry out the steps for ECT-01 and/or ECT-02, according to the assignment of the cluster module.

- Attach the cover to the device again.
- Lay the connecting cables in the control cabinet as stipulated.

Now the installation is completed.

6

COMMISSIONING

In this chapter we will describe how to commission the option module for b maXX drive PLC, which just was assembled and installed (see ▷Assembly and Installation◁ from page 31). Commissioning assures that the option module operates correctly. Further information according programming is found in the application manual b maXX drive PLC“ and in the application manual EtherCAT for b maXX PLC“

Before starting commissioning assure that the following conditions are fulfilled:

1 The option module was assembled correctly.

2 The option module was installed correctly.

3 All the safety devices are operating.

4 The b maXX device is ready for use.

6.1 General safety regulations

➲ observe ▷Safety◁ from page 13.

DANGER!

Risk of fatal injury due to mechanical forces!

The drive can rotate during commissioning.

Therefore

- Keep far enough away from the rotating parts.
- Note, that from starting drives machine parts can start to move.
- In all cases activate the machine’s safety devices of the machine parts and the drives, which are concerned.

6.2 Requirements for the personnel carrying out the work

Commissioning work may be carried out by trained specialists only, who have understood the safety regulations and information and can implement these.

6.3 Description/inspection of the safety and monitoring systems

Before commissioning, the option module for the b maXX drive PLC must eliminate present errors/error messages, which could be present on the b maXX 4400. These errors may be due to faulty assembly (e.g. defective cables) or faulty installation (e.g. missing power supply). Commissioning may not be continued, until the errors have been eliminated.

6.4 Description and inspection of the controls and displays

6.4.1 Configuration examples

6.4.1.1 BM4-O-ECT-01

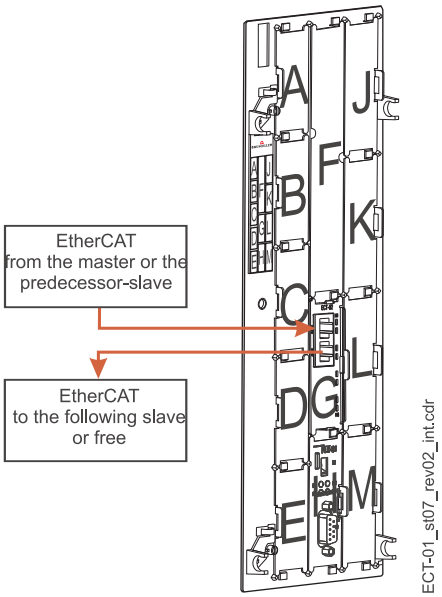

Figure 13: b maXX with option module EtherCAT-slave on option slot G and PLC on option slot H

6.4.1.2 BM4-O-ECT-02

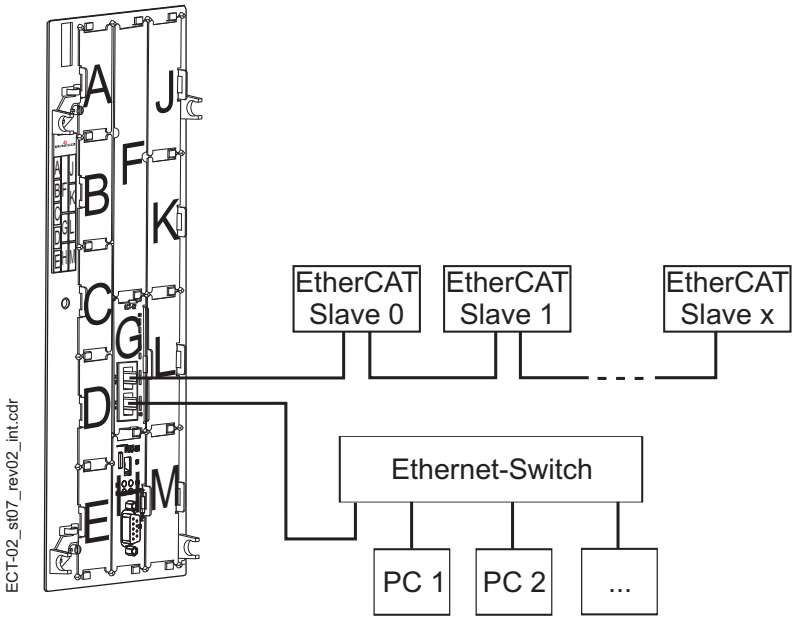

Figure 14: b maXX with option module Ethernet with EtherCAT master on option slot G and PLC on option slot H

6.4.1.3 BM4-O-ECT-03

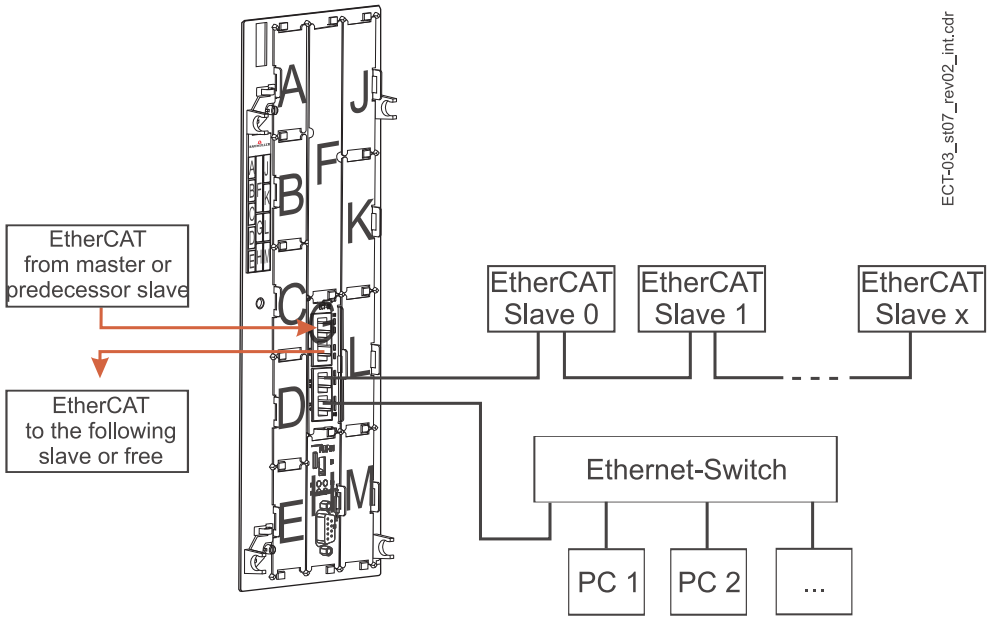

Figure 15: b maXX with option module Ethernet with EtherCAT cluster on option slot G and PLC on option slot H

6.4.2 Coding switch SW13000, SW13100

The DIP-switches (both SW 13000 and SW 13100) provide a 16 bit value which may be used as board / device identifier and / or IP address offset. For details of this usage see <Application manual EtherCAT>.

SW 13100 delivers the LSB of the 16 bit value.

SW 13000 delivers the MSB of the 16 bit value.

e.g.

SW13100					
		ON			
1		X			
2	X				
3		X	= 5		
4	X				
5	X				
6	X				
7	X				
8	X				
SW13000					
		ON			
1		X			
2		X			
3	X		= 3		
4	X				
5	X				
6	X				
7	X				
8	X				
				hex	dez
				= 16#0305	= 773

Please set the value according to your ProMaster project requirements.

You may configure the module ECT-0x to use it's coding switch settings as an additional offset to a configurable base IP address (e.g. 192.168.1.1). That's the factory default configuration of all ECT-0x modules. Both address resolution method and base address are stored in the module's flash EEPROM and may be changed by means of ProMaster tool. See <Application manual EtherCAT> for a complete description of all features regarding IP addressing.

If you want to use the factory default configuration for IP address setting - please keep in mind :

An IPv4 address is simply a 32 bit value. It is commonly represented in decimal octet notation separated by dots.

e.g. 192.168.1.1 is hexadecimal 16#C0_A8_01_01 (or decimal 10#3232235777)

e.g. 192.168.4.6 is hexadecimal 16#C0_A8_04_06

(notice: The prefix 16# denotes hexadecimal notification, according to IEC 61131. The prefix 10# denotes decimal notification.)

The resulting effective IP address of the module ECT-0x is calculated by an addition of

the preconfigured base address: 16#C0_A8_01_01 (..32 bit value) and

the actual coding switch value: 16#03_05 (..16 bit value)

resulting address = 16#C0_A8_04_06

Please avoid resulting octet values of 0 or 255 which will result in illegal or reserved IP addresses such as

192.168.x.255 or 192.169.255.0 or 192.169.0.0.

Please follow RFC 1918 to use private IP addresses (10.x.x.x = one Class A subnet, 172.16.x.x - 172.31.x.x = 16 Class B subnets, 192.168.x.x = 256 Class C subnets to 255 addresses each).

Please pay attention to the fact that IP addresses must be unique in connected ethernet/ EtherCAT networks.

Please use calculation tools like ProMaster to manage / calculate IP addresses and necessary coding switch settings.

Example for SW13100:

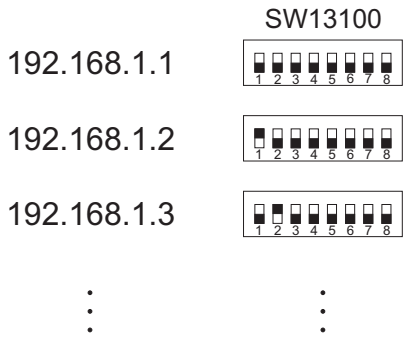

At SW 13000 all bits must be OFF.

Figure 16: Coding switch SW13100

6.4.3 LEDs

ECT-01:

The option module EtherCAT slave has 4 LEDs (a red one (H1) and 3 green ones (H2 to H4)) as display elements. (see „F“ in ▹Figure 7◃ on page 32).

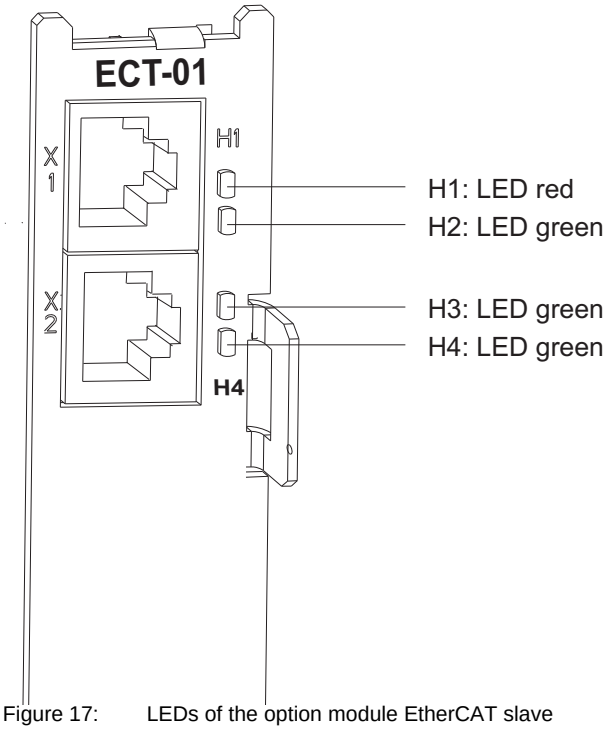

Figure 17: LEDs of the option module EtherCAT slave

ECT-02:

The option module Ethernet with EtherCAT master has 4 LEDs (3 green ones (H5 to H7) and a red one (H8)) (see „G“ in ▹Figure 8◃ on page 33) as display elements.

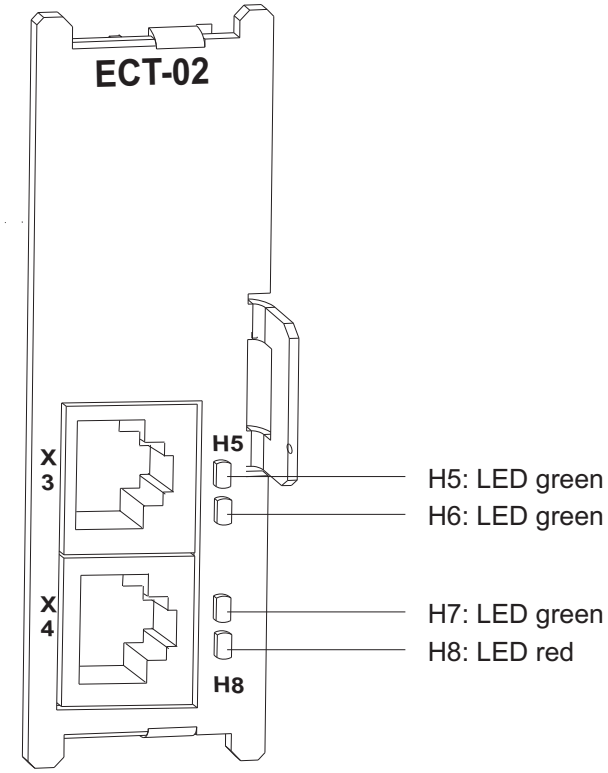

Figure 18: LEDs of the option module Ethernet with EtherCAT master

ECT-03:

The option module Ethernet with EtherCAT cluster has 8 LEDs (6 green ones (H2 to H7) and 2 red ones (H1 and H8)) (see „G“ in ▹Figure 9◃ on page 33).

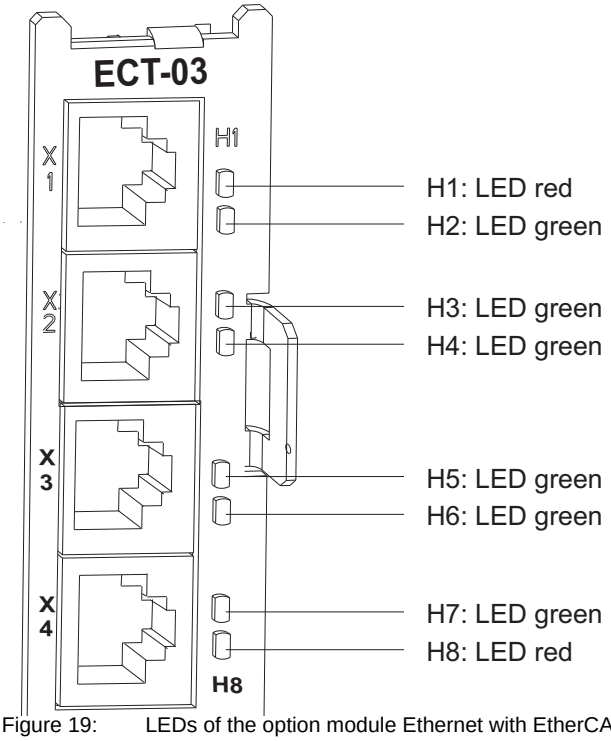

Figure 19: LEDs of the option module Ethernet with EtherCAT cluster

6.4.3.1 Flashing Sequence

The sequences of the single LEDs are explained in the following. The flashing sequences are based on the following timeframe:

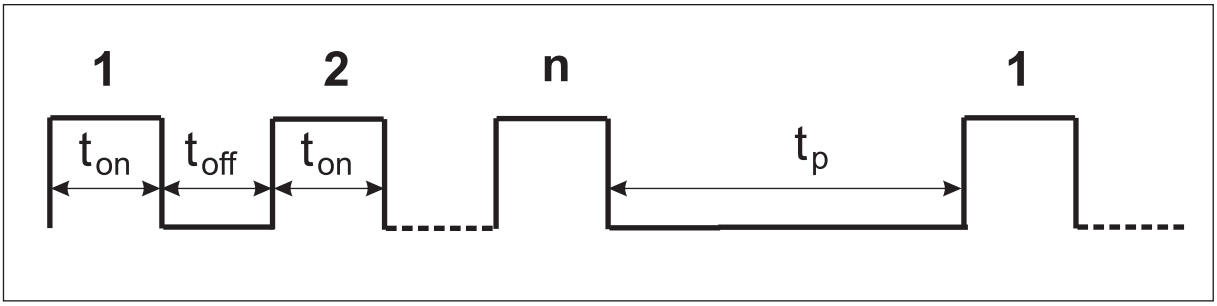

Abbildung 20: Flashing sequence of the LEDs

6.4.3.2 Meaning of the LEDs

LED	Blinkmuster	Bedeutung
H1 (red)	on	ERROR
H2 (green)	off	X1 (ECS IN): Link/Activity, No link
	on	X1 (ECS IN): Link/Activity, Link
	++	X1 (ECS IN): Link/Activity,Data transfer (Act)
H3 (green)	off	RESET / STOPPED / INIT
	t_{on} = 168ms t_{off} = 168ms	PRE-OPERATIONAL
	t_{on} = 168ms t_{off} = 1,17s	SAFE -OPERATIONAL
	on	OPERATIONAL
H4 (green)	off	X2 (ECS OUT): Link/Activity, No link
	on	X2 (ECS OUT): Link/Activity, Link
	flashing	X2 (ECS OUT): Link/Activity, Data transfer(Act)
H5 (green)	off	X3 (ECM): Link/Activity, No link
	on	X3 (ECM): Link/Activity, Link
	flashing	X3 (ECM): Link/Activity, Data transfer (Act)
H6 (green)	t_{on} = 400ms t_{off} = 400ms t_p = 2s n = 6	POWER-ON
	off	RESET / STOPPED / INIT
	t_{on} = 400ms t_{off} = 400ms	PRE-OPERATIONAL
	t_{on} = 400ms t_{off} = 400ms t_p = 1,2s n = 2	SAFE -OPERATIONAL
	ein	OPERATIONAL
H7 (green)	off	X4 (Ethernet): Link/Activity, No link
	on	X4 (Ethernet): Link/Activity, Link
	flashing	X4 (Ethernet): Link/Activity, Datâ transfer (Act)
H8 (red)	t_{on} = 400ms t_{off} = 400ms	FATAL ERROR

6.5 Commissioning sequence

The commissioning covers the following sections:

1 Activation

2 Testing of the function.

6.5.1 Activation

- Read and observe the ▹General safety regulations◃ from page 41.
- The section „Mounting and Installation“ must have been carried out correctly
- Switch on the basic unit b maXX 4400.

NOTE!

The option module may not be removed or plugged in, while the basic unit b maXX 4400 is active. Before doing this, switch off the unit.

6.5.2 Testing the function

The option module carries out initialization routines after it was switched on. After about 5 s the option mopdule is ready for operation. The LEDs indicate one of the operating status conditions stated in ▹Meaning of the LEDs◃ on page 48.

7

OPERATION

7.1 EtherCAT-Slave for b maXX drive PLC

Instructions for the operation of the option module EtherCAT slave for b maXX drive PLC can be found in the application manual ▹EtherCAT for b maXX PLC◃, as well as in the application manual ▹b maXX drive PLC◃ and in the programming manual ▹PROPROG wt II◃, or in the online-help of ProProg wt III.

7.2 EtherCAT-Master for b maXX drive PLC

Instructions for the operation of the option module Ethernet with EtherCAT master for b maXX drive PLC are found in the ▹Applcation manual EtherCAT for b maXX PLC◃, as well as in the ▹Application manual b maXX drive PLC◃ und im ▹Programming manual PROPROG wt II◃ or in the online-help of ProProg wt III.

7.3 EtherCAT-Cluster for b maXX drive PLC

Instructions for the operation of the option module Ethernet with EtherCAT cluster for b maXX PLC are found in the ▹Application manual EtherCAT for b maXX PLC◃, as well as in the ▹Application manual b maXX drive PLC◃ and in the ▹Programming manual PROPROG wt II◃ or in the online-help of ProProg wt III.

8

ERROR DETECTION AND TROUBLESHOOTING

In this chapter we describe the error indications at the option module for b maXX drive PLC. We explain the meaning of each error indication and how to respond on it.

8.1 Safety instructions

- observe the ▹2 Safety◃.

8.2 Requirements for the personnel carrying out the work

The personnel who work with the b maXX basic unit must have been instructed in operating the unit and be familiar with the correct handling operation of it. Responding to error displays and status conditions in particular requires special knowledge, which the operators must have. In the following we will advise you of the different errors and the error messages, which result from them. These errors may have mechanical or electrical causes.

8.3 Error messages (error list) - error reactions

8.3.1 EtherCAT-Slave (ECT-01)

If an error appears at the module EtherCAT slave for b maXX drive PLC the LED H1 flashes. If the error still occurs after executing the steps from chapter ▹5 Assembly and Installation◃ and ▹6 Commissioning◃, the module must be send to Baumüller Nürnberg GmbH for troubleshooting.

8.3.2 EtherCAT-Master (ECT-02)

The option module for b maXX drive PLC signals errors by the flashing of the LED H8 (red).

- Operation errors
  occur in the normal operation and are mostly caused by incorrect configuration settings by the user.

Sequence		Ethernet with EtherCAT-Master	Correction in the case of errors
H8 (red):	flashing t_{on} = 200 ms, t_{off} = 200 ms	EtherCAT-Master: Fatal Error	Carry out a bus diagnosis with ProMaster/ProEther-CAT to determine the cause of error. Debug the cause of error and restart the system (or reset the application).

NOTE!

For more details refer to the b maXX drive PLC operating manual and the EtherCAT for b maXX PLC application manual.

8.3.3 EtherCAT-Cluster (ECT-03)

If there is an error in the slave range, refer to ▹EtherCAT-Slave (ECT-01)◃ on page 53.

If there is an error in the master range, refer to ▹8.3.2 EtherCAT-Master (ECT-02)◃.

9

MAINTENANCE

If you comply with the environmental operating conditions specified in ▹Appendix D - Technical Data◃ from page 73, the option module for b maXX drive PLC is maintenance-free. If you find a defect in your option module or think that it is defective, contact Baumüller Nürnberg GmbH.

10

REPAIR

You cannot repair a defective option module for b maXX drive PLC. For replacement contact Baumüller Nürnberg GmbH.

11

DEMOUNTING, STORAGE

IIn this chapter the decommissioning and storage for the option module for b maXX drive PLC is described.

11.1 Safety instructions

➲ Observe the chapter ▹Safety◃ from page 13.

WARNING!

Risk of injury due to electricity.

The unit carries dangerous voltages and currents, as well as residual charges in the DC link.

Therefore:

- Assure that all electrical connections are disconnected from the mains and protected against being switched on again.
- Wait until the DC-link has discharged, before starting demounting work.The capacitors that are used in the unit have discharged automatically **10 min.** after the supply voltage is switched off, so that the connections can be demounted without any risk.
- Before starting work on the electrical connections, use appropriate measuring equipment to assure that the connections are de-energized
- The connections may not be demounted unless they are de-energized.

CAUTION!

Damage due to electrical destruction.

The components may get destroyed electrically, if it is removed with the supply voltage on.

Therefore:

- Assure that all electrical connections have been de-energized and are secured against restarting.
- Wait until the DC-link has discharged before starting any demounting work. The capacitors that are used in the unit have discharged automatically **10 min.** after the supply voltage is switched off such that you can demount the connections without any risk.
- Before starting work on the electrical connections, use appropriate measuring equipment to ensure that the connections are de-energized.
- Do not demount the connections until you are certain that they are de-energized.

WARNING!

Danger of injury due to uncontrollable behavior of the machine/system.

Removal of the module with switched on supply voltage can change the behavior of the machine/system.

Therefore:

- Assure that all the electrical connections have been de-energized and are secured against restarting.
- Wait until the DC-link has discharged before starting any demounting work. The capacitors that are used in the unit have discharged automatically **10 min.** after the supply voltage is switched off such that you can demount the connections without any risk.
- Before starting work on the electrical connections, use appropriate measuring equipment to ensure that the connections are de-energized.
- Do not demount the connections until you are certain that they are de-energized.

11.2 Requirements for the personnel carrying out the work

The personnel, who is assigned with the demounting, must have the necessary knowledge and have been trained appropriately to carry out this work. Choose these persons such that they understand and can apply the safety instructions printed on the unit and parts of it and on the connections.

11.3 Demounting

➲ Provide the following material before starting demounting:

- Suitable packaging for the option module; if possible, the original packaging.

- Cover plate to cover the slot.
- Suitable tools for pulling out the board (e.g. pointed electronic pliers)

Carry out demounting in the following sequence:

1 De-energize the b maXX 4400 basic unit and secure it from unintentional switch-on.

2 Wait ten minutes (the capacitors discharge).

3 Open the switching cabinet.

4 Remove the b maXX 4400 basic unit's cover.

5 Remove the male connectors from the sockets.

6 Turn the spagnolet locks above and below the option module's front panel slot by 90° (in the horizontal position, they are unlocked).

CAUTION!

Damage due to electrostatic discharge.

The electronic components on the PCB can be damaged or destroyed if you touch them with your hands.

Therefore:

- Only touch the option module by the handle on the front panel.

CAUTION!

Danger of injury due to sharp edges.

The components of the option module, sheet steel parts etc. may have sharp edges! If the option module is not touched at its handle, the fingers or the palm of the hands may be cut.

Therefore:

- Touch the option module at the handle of the front plate only.

7 Pull the option module by the handle forwards out of the b maXX basic unit.

8 Place the module in the prepared packaging - when doing this, only touch the plug-in module by the handle.

9 Now fit a cover (or a new option module for b maXX drive PLC) in the open slot (the handle must be pointing toward the right-hand side of the unit).

10 Turn the spagnolet locks by 90° (in the vertical position the locks are fastened).

11 Remount the cover on the unit.

12 Close the switching cabinet.

13 Document demounting (or replacing) the option module.

You can now switch on the unit back on again. If you want to dispose of the module, refer to chapter ▹Disposal◃ from page 63 for more information.

11.4 Storage conditions

Store the option module for b maXX drive PLC in suitable packaging according to the storage conditions in ▹Appendix D - Technical Data◃ from page 73.

11.5 Recommissioning

If the option module for b maXX drive PLC shall be recommissioned again, observe the storage conditions in ▹Appendix D - Technical Data◃ from page 73. Then carry out commissioning again.

12

DISPOSAL

In this chapter we will describe how you can correctly and safely dispose of the option module for b maXX drive PLC. Most of the waste is electronic scrap.

12.1 Safety instructions

➲ Observe the chapter ▹Safety◃ from page 13.

CAUTION!

Danger of injury due to sharp edges.

The components of the option module, sheet steel parts, etc. can have sharp edges! If you do not hold an option module by the handle, you can cut your fingers or the palm of your hand.

Therefore:

- You may hold the option module on the handle on the front panel only.

CAUTION!

Danger due to incorrect disposal

- You must only carry out disposal in accordance with the safety instructions. If necessary, it must also comply with any local instructions. If the safely dispose of the unit cannot be carried out, commission a suitable disposal company to carry it out.
-
- *In case of fire, dangerous compounds may result or hazardous materials may be released.*
- Do not subject electronic components to high temperatures.
- *Some high-performance semi-conductors, for example, use beryllium oxide as the internal insulation. The beryllium dust that results on opening is a health risk.*
- Do not open the electronic components.

12.2 Requirements for the personnel carrying out the work

The personnel that carries out disposal/demounting must have the necessary knowledge and have been trained appropriately to carry out this work. Choose these persons such that they understand and can apply the safety instructions printed on the b maXX 4400 basic unit and parts of it.

12.3 Recycling guide

Conditions

- The option module for the b maXX drive PLC has already been correctly removed from the controller cartridge.
- All the necessary technical aids for demounting are ready for use and are in perfect technical condition.

Sheet steel

The front panel is made of galvanized sheet steel. Dispose of the sheet steel in your local reusable ferrous metal system.

Electronic scrap

The electronic scrap (PCB) must be disposed of that cannot be further demounted as hazardous waste. When doing this, observe the applicable regulations.

12.4 Recycling locations / official authorities

Assure to carry out recycling in accordance with the company's guidelines and with the regulations of the responsible recycling location and official authorities. If in doubt, contact the Trade Supervisory Authority that is responsible for your company or the Environmental Protection Authorities.

A

APPENDIX A - ABBREVIATIONS

API Application Program Interface
ARP Address Resolution Protocol
BACI Baumüller Component Interface
BUB Ballast Unit
BUC Baumüller Feed/Feedback Unit
BUG Baumüller Converter Basic Feed Unit
BUM Baumüller Single Power Unit
BUS Baumüller Power Module
CAL CAN Application Layer
CAN Controller Area Network
CiA CAN in Automation e. V.
COB Communication Object
COB-ID Communication Object Identifier
CSMA/CD Carrier Sense Multiple Access / Collision Detection
CSMA/CA Carrier Sense Multiple Access / Collision Avoidence
CPU Central Processing Unit
DC Direct Current
DCF Device Configuration File
DHCP Dynamic Host Configuration Protocol
DIN Deutsches Institut für Normung e.V.(German Standards Institute)
DP-RAM Dual-Port RAM
DR Draft Recommendation
DS Draft Standard
DSP Draft Standard Proposal
EDS Electronic Data Sheet
EMV Elektromagnetic Compatibility
EN European Standard
EPROM Erasable Programmable Read Only Memory
ESD Electrostatic Sensitive Device
FTP File Transfer Protocol
HD Hamming Distance
HTML Hyper Text Markup Language
HTTP Hypertext Transfer Protocol
I/O Input/Output
ICMP Internet Control Message Protocol
IP Internet Protocol
IRP Interrupt
ISO International Standard Organisation
LAN Local Area Network
LSS Layer Setting Services
MAC Media Access Control
OSI Open Systems Interconnect
PDD Process Data Index
PDO Process Data Object
PELV Protective Extra Low Voltage (grounded version of SELV)
PLC Process Loop Controller (SPS)
RAM Random Access Memory
SAP Service Access Point
SDO Service Data Object
SELV Safety Extra Low Voltage
SMS Short Message System
SMTP Simple Mail Transfer Protocol
SPS Programmable Logic Control
SRD SDO Requesting Device
SRDO Safety Relevant Data Object
TCP Transport Control Protocol

Telnet	Terminal over Network
UDP	User Datagram Protocol
URL	Uniform Resource Locator
USS	Function Module USS-Protocol
USS®	Registered Trademark Siemens, universal serial interface
VDE	Verband deutscher Elektrotechniker (German Association for Electrical, Electronic & Information Technologies)
16#	Prefix für Hexadecimal Number

B

APPENDIX B - ACCESSORIES AND SPARE PARTS

In this appendix, a list of all accessories that are available for Baumüller Nürnberg GmbH's option module for b maXX drive PLC.

Baumüller's product mangement will be pleased to deal with queries about accessories or suggestions for improvements.

B.1 List of all accessories

B.1.1 Ethernet-cable

Crossover package comprising cross coupling (item no. 365463) and Cat5 cable 0.5 m (item no. 325160)

Type	Item No.
K-ETH-CROSS-ADAPTER	365464

Modular coupling, RJ45 female connector - RJ45 female connector, crossover, Cat5, screened

Type	Item No.
K-ETH-CROSS-COUPLING	365463

Line type: K-ETH-33-0-xx (RJ45 male connector, RJ45 male connector)

Type	Length [m]	Item No.
K-ETH-33-0-0,5	0,5	325160
K-ETH-33-0-01	1	325161
K-ETH-33-0-02	2	325162
K-ETH-33-0-03	3	325163

Type	Length [m]	Item No.
K-ETH-33-0-04	4	325317
K-ETH-33-0-05	5	325164
K-ETH-33-0-10	10	325165

B.1.2 EtherCAT-cable

Line type: K-ETH-33-0-xx (RJ45 male connector, RJ45 male connector)

Type	Length [m]	Item No.
K-ETH-33-0-0,5	0,5	325160
K-ETH-33-0-01	1	325161
K-ETH-33-0-02	2	325162
K-ETH-33-0-03	3	325163
K-ETH-33-0-04	4	325317
K-ETH-33-0-05	5	325164
K-ETH-33-0-10	10	325165

C

APPENDIX C - DECLARATION OF CONFORMITY

In this section we provide general information about EU Directives, the CE symbol and the Declaration by Manufacturer.

C.1 What is an EU Directive

EU Directives specify requirements. The directives are written by the relevant bodies within the EU and are implemented by all the member countries of the EU in national law. In this way the EU Directives guarantee free trade within the EU.

An EU directive only contains essential minimum requirements. You will find detailed requirements in standards, to which references are made in the directive.

C.2 What the CE symbol indicates

a) The CE marking symbolizes conformity to all the obligations incumbent on manufacturers for the product by virtue of the Community directives providing for its affixing.

…

b) The CE marking affixed to industrial products symbolizes the fact that the natural or legal person having affixed or been responsible for the affixing of the said marking has verified that the product conforms to all the Community total harmonization provisions which apply to it and has been the subject of the appropriate conformity evaluation procedures.

…

Council Decision 93/465/EEC, Annex I B. a) + c)

We affix the CE mark to the equipment and to the documentation as soon as we have established that we have satisfied the requirements of the relevant directives.

All control systems of Baumüller Nürnberg GmbH are not affected by the Low Voltage Directive, because its operating voltage is smaller than 60 V DC voltage or 75 V AC voltage. Therefore a Declaration of Conformity on the 2006/95/EG ((Low Voltage Directive) cannot be issued.

The electric control security and functioning is checked by means of the harmonized standard EN 61131-2.

With specified application of this Baumüller equipment in your machinery, you can act on the assumption that the equipment satisfies the requirements of 2006/42/EG (EC Machinery Directive).
Therefore the equipment is developed and constructed in such a way, that the requirements of the harmonized standard EN 60204-1 can be met by the electrical installation.
The controls of Baumüller Nürnberg GmbH comply with the requirements of 2002/108/EG (EMC Directive) by complying with the requirements of the harmonized standard EN 61131-2.

So that the machine can be marketed within the EU, the following must be effective:

- Mark of Conformity (CE-mark)
- Declaration(s) of Conformity regarding the relevant directive(s) for the machine.

C.3 Definition of the term Declaration of Conformity

A Declaration of Conformity in the sense of this manual is a declaration, that the electric means brought into circulation conform to all the relevant fundamental safety and health requirements.

Baumüller Nürnberg GmbH declares by issuing the Declaration of Conformity, that the device conforms to the relevant fundamental safety and health requirements resulting from the directives and standards, which are listed in the Declaration of Conformity.

C.4 Declaration of Conformity

be in motion be in motion be in motion

BAUMÜLLER

www.baumueller.com

EC - Declaration of Conformity

Doc.-No: 5.11010.00
Date: 08.06.2011

in accordance with EMC-Directive 2004/108/EG

The manufacturer hereby declares: Baumüller Nürnberg GmbH
Ostendstraße 80-90
90482 Nürnberg, Deutschland

that the following products with the

term: EtherCAT-Slave
EtherCAT-Master
EtherCAT-Cluster

type: BM4-O-ECT-01
BM4-O-ECT-02
BM4-O-ECT-03

from date of manufacture: 08.06.2011

were developed, constructed and manufactured in compliance with the EMC-Directive 2004/108/EG.

Applied harmonized standards:

Standard	Title
DIN EN 61131-2:2007	Programmable logic controllers Part 2: Equipment requirements and tests

The safety notes in the manual must be observed.

Nürnberg / 08. Juni 2011
Place / Date

The contents of the Declaration of Conformity are subject to change without prior notice. The currently applicable version on request.

D

APPENDIX D - TECHNICAL DATA

In this appendix, you will find the technical data for Baumüller Nürnberg GmbH.diesem Anhang finden Sie die technischen Daten für das Optionsmodul von der Fa. Baumüller Nürnberg GmbH.

D.1 Connection values

BM4-O-ECT-01

EtherCAT net types	10BaseT, 100BaseTX
Ethernet plug-in connector	RJ45-female connector
Operating voltage	+5 V DC internal
Current consumption	450 mA internal
Isolation	720 V DC
Ambient conditions	the same as basic unit b maXX 4400
Storage conditions	the same as basic unit b maXX 4400
Transport conditions	the same as basic unit b maXX 4400

BM4-O-ECT-02

Ethernet net types	10BaseT, 100BaseTX
Plug-in connector Ethernet	RJ45-female connector
EtherCAT net types	10BaseT, 100BaseTX
Plug-in connector Ethernet	RJ45-female connector
Operating voltage	+5 V DC internal
Current consumption	500 mA internal
Isolation	720 V DC
Ambient conditions	the same as basic unit b maXX 4400
Storage conditions	the same as basic unit b maXX 4400
Transport conditions	the same as basic unit b maXX 4400

BM4-O-ECT-03

Ethernet net types	10BaseT, 100BaseTX
Plug-in connector Ethernet	RJ45-female connector
EtherCAT net types	10BaseT, 100BaseTX
Plug-in connector Ethernet	RJ45-female connector
Operating voltage	+5 V DC internal
Current consumption	700 mA internal
Isolation	720 V DC
Ambient conditons	the same as basic unit b maXX 4400
Storage conditions	the same as basic unit b maXX 4400
Transport conditions	the same as basic unit b maXX 4400

D.2 Pin assignment RJ45-connector for Ethernet

Pin No.	Assignment
1	TX+ (Transmit line +)
2	TX- (Transmit line -)
3	RX+ (Receive line +)
4	Reserved
5	Reserved
6	RX- (Receive line -)
7	Reserved
8	Reserved

D.3 Pin assignment RJ45-connector for EtherCAT

Pin No.	Assignment
1	TX+ (Transmit line +)
2	TX- (Transmit line -)
3	RX+ (Receive line +)
4	Reserved
5	Reserved
6	RX- (Receive line -)
7	Reserved
8	Reserved

Revision overview

Version	Date	Changes
5.10018.01	15.06.2011	First draft
5.10018.02	13.03.2012	Chap. 5.4 and chap. 6.4.2 Dip switch changed

Notes

Index

be in motion

Baumüller Nürnberg GmbH Ostendstraße 80-90 90482 Nuremberg Tel: +49(0)911-5432-0 Fax: +49(0)911-5432-130 **www.baumueller.de**