BAUMÜLLER

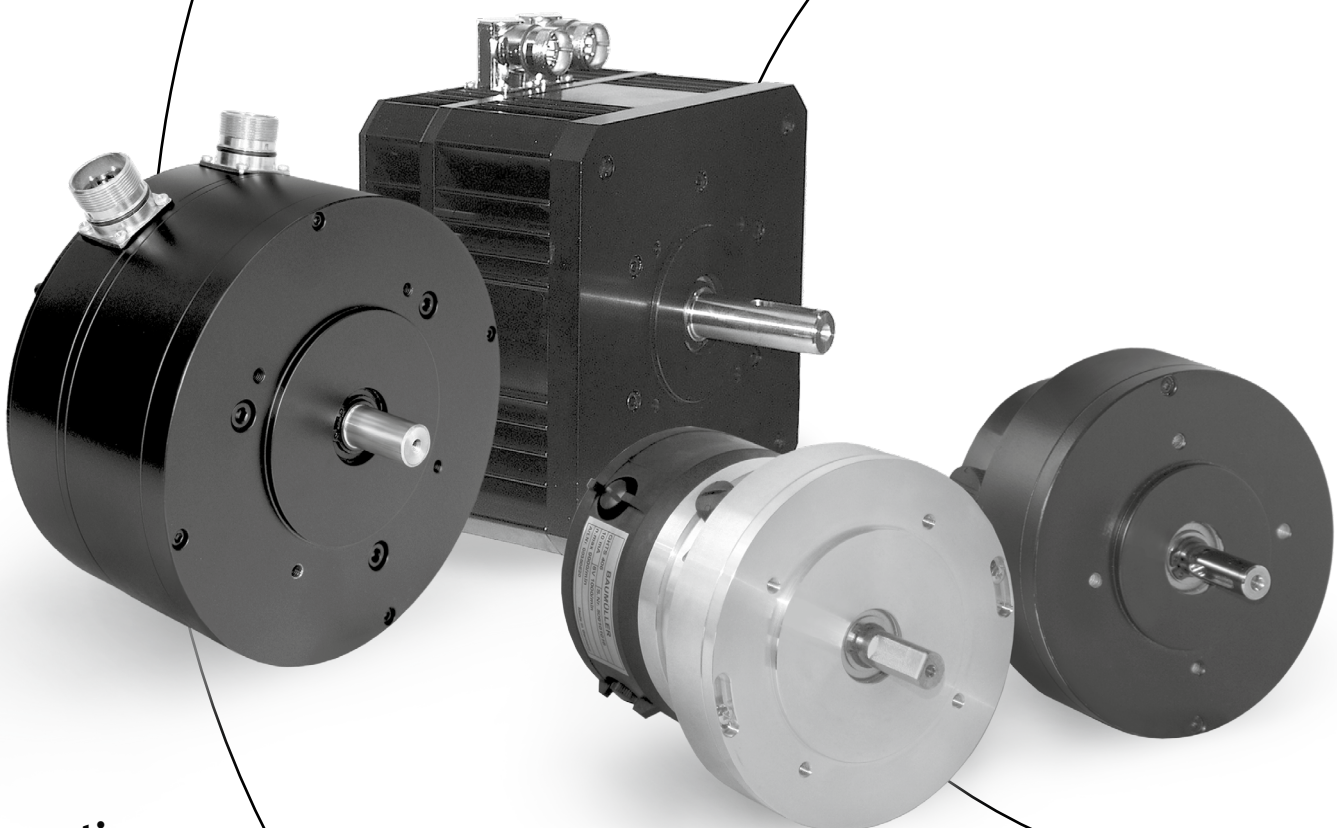

be in motion

Disc motors

GDM and DSM

Content

All details in this list are non-binding customer information, are subject to constant development and are continuously updated by our permanent modification service. Please note that data/figures/information are current values at the date of printing. For dimensioning, calculation and calculation these data are not legally binding. Before you use the information listed in this brochure as a basis for your own calculations and/or applications, please make sure that you have the most up-to-date information. A liability for the correctness of information is therefore not taken over!

Stand 12/2022

1. General technical data and safety notes

1.1. General safety notes

The standard version of the motors is not suitable for operation in salty or aggressive atmospheres, nor for outdoor installation. If the ambient air of ventilated motors is contaminated by dust particles or similar substances which are not reliably separated by the filter elements used, the manufacturer must be consulted in order to find a solution.

NOTE:

Assigning the motor to a specific degree of protection class is a standardized, short-term test procedure. This can deviate considerably from teh real environmental conditions at the place of use.
Depending on the environmental conditions such as the chemical nature of the dusts or the coolants used at the place of us the assessment of the suitability of the motor based on the degree of protection class is only possible to a limited extent (e.g. electrically conductive dusts or aggressive coolant vapors or liquids). In these cases, the motor must be additionally protected by appropriate measures on the machine side.

1.2. Winding insulation

The motors are made for the operation on converters with the following DC link voltages:

GDM1-090	24…60 V
DSM1-115	24…60 V
DSM1-125	400 V
DSM1-117-150	24…540 V

1.3. Explanations to the motor data

n_N	Rated speed [min^{-1}]
M_0	Standstill torque [Nm] at speed ≥ 1 min^{-1} unlimited in time
I_0	Standstill effective current [A] at M_o
$M_{0,max}$	Maximum standstill torque [Nm] at maximum current [A] and speed = 0, briefly
$I_{0,max}$	Standstill current [A] at $M_{o,\ max}$; I_{0max} is the effective value
P_N	Rated power [kW] at M_N and n_N (refer to performance definition)
M_N	Rated torque [Nm]
I_N	Rated effective current [A]
$K_{E\ /\ KALT}$	Voltage constant (EMC) to [V per 1000 min^{-1}]
f_N	Rated frequency [Hz]
J	Rotor inertia [kgm^2]
m	Motor volume [kg]

The specified rated power and torque at rated speed are achieved with converter operation at a clock frequency in the power section of ≥4 kHz. A clock frequency of >6 kHz is recommended. The possibility of field weakening is assumed for converters to be used.

1.4. Performance definition

1.4.1. Performance definition for air-cooled machines

The power ratings (torques) given in the list apply to continuous operation (S1) at rated speed at a maximum ambient temperature of 25 °C, when the machines are installed below 1000 m above sea level. If motors are to be used in an ambient temperature of more than 25 °C or at altitudes above 1000 m above sea level, the required list power P_L (list torque M_n) is calculated from the product of the factors k_1, k_2 given in the following table and the required power P (torque M).

Ambient temperature	30 °C	35 °C	45 °C	50 °C	60 °C
Correction factor k1	1	1,06	1,13	1,22	1,34
Height above sea level to	1000 m	2000 m	3000 m	4000 m	5000 m
Correction factor k2	1	1,07	1,16	1,27	1,55

If the ambient temperature drops by about 10 °C per 1000 m increase in altitude with increasing installation altitude above 1000 m, no power correction is necessary (observe minimum operating temperature).

2. Direct current – disc motor GDM1

The Baumüller direct current – disc motors are permanent magnet excited motor with ironless rotor and drum-shaped commutator, thus low inertia and highly dynamic running characteristics. They can be easily controlled over their entire speed range and even at the lowest speeds, less than one revolution per minute, the concentricity is maintained exactly.

2.1. General technical data

Size	IM B14	Mounting position horizontal, according to EN 60034-7
	IM V18	Mounting position vertical, shaft end downwards, acc. to EN60034-7
	IM V19	Mounting position vertical, shaft end upwards, acc. to EN 60034-7 (note: Ensure protection against ingress of water and dirt)
Degree of protection	IP44	Housing without viewing the shaft feedthrough with mounted mating connectors
	IP44	Shaft feedthrough
Connection	Main/encoder connection	
	Brake	
Cooling type	IC 410	Surface cooled without fan
Temperature rise	$\Delta\vartheta$ = 105 K	Insulation material class F acc. to EN 60034
Ambient temperature In operation	Class 3K3/3Z12 acc. to DIN EN 60721-3-3:1995, but: Temperature range	Corresponds to 0 to 40 °C at 5 % to 85 % rel. humidity and an absolute humidity of 1 g/m³ to 25 g/m³ and an installation altitude up to approx. 1400 m
Storage	Class 1K4/1M1 acc. to DIN	
Transport	Class 2K3/2M2 acc. to DIN	
Surface	unvarnished	
Bearing	A-side	Standard: Ball bearing;
Bearing service life	L_{10H} 20.000 h	Standard value, rolling bearings with permanent grease lubrication according to
Balance quality	A	DIN EN60034-14 (VDE 0530-part14):2004-09
	B	On request
Concentricity	N; R	Standard: Normal acc. to DIN 42955/ Option: Reduced acc. to DIN 42955
Vibration-resistant to	radial 3 g	10 Hz to 100 Hz acc. to EN 60068-2-6
	axial 0,5 g	10 Hz to 100 Hz acc. to EN 60068-2-6
Shaft end	cylindrical	Smooth ac. to DIN 748; also available with feather key DIN 6885
Holding brake	Spring-operated brake	Optional for BG 100 and 120
Actual speed value encoder	Tacho generator	Option – see chapter 2.6
	Pulse encoder	Option – see chapter 2.6
Certifications	CE	Standard

2.2. Type key

GDM1-XXXXXXXX-XX-XX-XXX-XXX-X-XX-X-XXX	Type
GDM1-**XXX**XXXXX-XX-XX-XXX-XXX-X-XX-X-XXX	**Size** 009 010 012 075 080 100 120
GDM1-XXX**XX**XXX-XX-XX-XXX-XXX-X-XX-X-XXX	**Magnet system** F1 N1 N2
GDM1-XXXXX**XX**X-XX-XX-XXX-XXX-X-XX-X-XXX	**Degree of protection** 44 – degree of protection IP44
GDM1-XXXXXXX**X**-XX-XX-XXX-XXX-X-XX-X-XXX	**Cooling type** U - without fan
GDM1-XXXXXXXX-**XX**-XX-XXX-XXX-X-XX-X-XXX	**Rated speed class** 18 - 1800 1/min 20 - 2000 1/min 21 - 2100 1/min 22 - 2200 1/min 23 - 2300 1/min 25 - 2500 1/min 27 - 2700 1/min 30 - 3000 1/min 32 - 3200 1/min 35 - 3500 1/min 40 - 4000 1/min 41 - 4100 1/min 42 - 4200 1/min
GDM1-XXXXXXXX-XX-**XX**-XXX-XXX-X-XX-X-XXX	**DC link voltage** 01 - 12 V 02 - 24 V 03 - 36 V
GDM1-XXXXXXXX-XX-XX-**X**XX-XXX-X-XX-X-XXX	**Encoder type** O – without encoder A – Tacho 2225 B – Tacho GT5.05 C – Tacho GHTS406 a – Incremental encoder RM36
GDM1-XXXXXXXX-XX-XX-X**X**X-XXX-X-XX-X-XXX	**Brake** O – without brake B - with PE-brake

GDM1-XXXXXXXX-XX-XX-XX**X**-XXX-X-XX-X-XXX	**Shaft options** A – Smooth shaft B – with feather key
GDM1-XXXXXXXX-XX-XX-XXX-**X**XX-X-XX-X-XXX	**Main connection type** f – Flat connector l – Stranded connector
GDM1-XXXXXXXX-XX-XX-XXX-X**X**X-X-XX-X-XXX	**Main outlet connection** R - Radial
GDM1-XXXXXXXX-XX-XX-XXX-XX**X**-X-XX-X-XXX	**Encoder outlet connection** R - Radial
GDM1-XXXXXXXX-XX-XX-XXX-XXX-**X**-XX-X-XXX	**Bearing** K – Ball bearing A-side
GDM1-XXXXXXXX-XX-XX-XXX-XXX-X-**X**X-X-XXX	**Vibration quality** A – Vibration quality A B – Vibration quality B
GDM1-XXXXXXXX-XX-XX-XXX-XXX-X-X**X**-X-XXX	**Smooth running** N - Normal R - Reduced
GDM1-XXXXXXXX-XX-XX-XXX-XXX-X-XX-**X**-XXX	**Mounted gearing** O - without mounted gearing A – BPE - gear B – BPEF – gear C – BPEA - gear D – BPN - gear E – BPNA - gear F – BPNF- gear
GDM1-XXXXXXXX-XX-XX-XXX-XXX-X-XX-X-**XXX**	**Expanded version** 000 -without special version

Example configurations
GDM1-080N244U-18-02-OOA-FRR-K-AN-000

2.3. Overview electric data

2.3.1. GDM1-075..44U-..

Rated voltage	Motor type	Standstill torque	Standstill current	max. standstill torque	max. standstill current	Rated power	Rated torque	Rated current	Voltage constant	Speed	Rotor torque of inertia (motor)	Weight
U		M_0	I_0	$M_{0,max}$	$I_{0,max}$	P_N	M_N	I_N	$K_{E/cold}$	n_N	J	m
V DC		Ncm	A	Ncm	A	W	Ncm	A	$V/_{1000\ min^{-1}}$	min^{-1}	$kgcm^2$	kg
12	GDM1-075..44U-30-01	5,5	2,65	11,4	6	16	5	2,4	2,5	3000	0,5	0,48
24	GDM1-075..44U-30-02	5,5	1,3	12,7	3	16	5	1,1	5,4	3000	0,5	0,48

2.3.2. GDM1-080..44U-..

Rated voltage	Motor type	Standstill torque	Standstill current	max. standstill torque	max. standstill current	Rated power	Rated torque	Rated current	Voltage constant	Speed	Rotor torque of inertia (motor)	Weight
U		M_0	I_0	$M_{0,max}$	$I_{0,max}$	P_N	M_N	I_N	$K_{E/cold}$	n_N	J	m
V DC		Ncm	A	Ncm	A	W	Ncm	A	$V/_{1000\ min^{-1}}$	min^{-1}	$kgcm^2$	kg
12	GDM1-080N144U-25-01	23	2,7	92	10	52	20	5,9	3,6	2500	0,7	0,74
24	GDM1-080N144U-27-02	28	4,2	54	13	71	25	3,7	7,3	2700	0,7	0,74
20	GDM1-080F.44U-42-02	12	3,1	30	8	44	10	2,8	4,0	4200	0,7	0,74

2.3.3. GDM1-009F144U-..

Rated voltage	Motor type	Standstill torque	Standstill current	max. standstill torque	max. standstill current	Rated power	Rated torque	Rated current	Voltage constant	Speed	Rotor torque of inertia (motor)	Weight
U		M_0	I_0	$M_{0,max}$	$I_{0,max}$	P_N	M_N	I_N	$K_{E/cold}$	n_N	J	m
V DC		Ncm	A	Ncm	A	W	Ncm	A	$V/_{1000\ min^{-1}}$	min^{-1}	$kgcm^2$	kg
12	GDM1-009F144U-27-01	9	3,5	28	10	23	8	3,1	3,0	2700	0,6	0,71
18	GDM1-009F144U-41-02	3	3,1	43	13	34	8	2,7	3,4	4100	0,6	0,71
24	GDM1-009F144U-30-02	11,5	2,2	41	7	32	10	1,9	5,9	3000	0,6	0,71

2.3.4. GDM1-010N.44U-..

Rated voltage	Motor type	Standstill torque	Standstill current	max. standstill torque	max. standstill current	Rated power	Rated torque	Rated current	Voltage constant	Speed	Rotor torque of inertia (motor)	Weight
U		M_0	I_0	$M_{0,max}$	$I_{0,max}$	P_N	M_N	I_N	$K_{E/cold}$	n_N	J	m
V DC		Ncm	A	Ncm	A	W	Ncm	A	$V/_{1000\ min^{-1}}$	min^{-1}	$kgcm^2$	kg
12	GDM1-010N.44U-27-01	29	7	146	34	50	24	5,7	4,6	2700	1,2	0,78
24	GDM1-010N.44U-25-02	46	6,7	241	33	105	40	5,6	7,6	2500	1,2	0,78
36	GDM1-010N.44U-30-03	50	5,4	295	31	142	45	4,8	5,9	3000	1,2	0,78

2.3.5. GDM1-100N.44U-..

Rated voltage	Motor type	Standstill torque	Standstill current	max. standstill torque	max. standstill current	Rated power	Rated torque	Rated current	Voltage constant	Speed	Rotor torque of inertia (motor)	Weight
U		M_0	I_0	$M_{0,max}$	$I_{0,max}$	P_N	M_N	I_N	$K_{E/cold}$	n_N	J	m
V DC		Ncm	A	Ncm	A	W	Ncm	A	$V/_{1000\ min^{-1}}$	min^{-1}	$kgcm^2$	kg
12	GDM1-100N144U-22-01	50	15,2	215	61	105	45	13,7	3,7	2200	1,6	1,8
24	GDM1-100N144U-32-02	62	11,4	360	64	185	55	10,1	5,9	3200	1,6	1,8
24	GDM1-100N244U-23-02	95	12,8	687	89	205	85	11,0	8,4	2300	1,6	1,8
24	GDM1-100N244U-40-02	68	15,6	615	123	250	60	12,9	5,3	4000	1,6	1,8

2.3.6. GDM1-012.144U-..

Rated voltage	Motor type	Standstill torque	Standstill current	max. standstill torque	max. standstill current	Rated power	Rated torque	Rated current	Voltage constant	Speed	Rotor torque of inertia (motor)	Weight
U		M_0	I_0	$M_{0,max}$	$I_{0,max}$	P_N	M_N	I_N	$K_{E/cold}$	n_N	J	m
V DC		Ncm	A	Ncm	A	W	Ncm	A	$V/_{1000\ min^{-1}}$	min^{-1}	$kgcm^2$	kg
12	GDM1-012F144U-18-01	20	6,2	42	12	32	17	5,2	3,7	1800	2	1,25
24	GDM1-012F144U-20-02	34	4,8	87	12	63	30	4,2	8,0	2000	2,3	1,25
24	GDM1-012F144U-30-02	26	5,4	87	17	72	23	4,8	5,5	3000	2,1	1,25
24	GDM1-012N144U-30-02	40	6,4	650	96	110	35	5,5	7,6	3000	2,5	1,65
24	GDM1-012N144U-20-02	78	4	540	26	147	70	3,7	21,6	2000	2,7	1,65

2.3.7. GDM1-120..44U-..

Rated voltage	Motor type	Standstill torque	Standstill current	max. standstill torque	max. standstill current	Rated power	Rated torque	Rated current	Voltage constant	Speed	Rotor torque of inertia (motor)	Weight
U		M_0	I_0	$M_{0,max}$	$I_{0,max}$	P_N	M_N	I_N	$K_{E/cold}$	n_N	J	m
V DC		Ncm	A	Ncm	A	W	Ncm	A	$V/_{1000\ min^{-1}}$	min^{-1}	$kgcm^2$	kg
24	GDM1-120N144U-18-02	112	13,5	672	69	190	100	11,1	10	1800	3,6	3,0
24	GDM1-120N144U-21-02	102	13	672	79	198	90	11,5	8,8	2100	3,6	3,0
24	GDM1-120N144U-25-02	95	14,3	766	105	223	85	12,8	7,5	2500	3,6	3,0
24	GDM1-120N144U-30-02	84	15,7	766	126	236	75	13,9	6,3	3000	3,6	3,0
24	GDM1-120N244U-18-02	170	17,1	1122	106	290	150	15,1	10,8	1850	3,6	3,0
24	GDM1-120N244U-22-02	150	18,2	1104	125	310	135	16,4	9,0	2200	3,6	3,0
24	GDM1-120N244U-30-02	125	19,4	1782	252	350	110	17,1	7,2	3000	3,6	3,0
24	GDM1-120N244U-21-02	220	12	1830	94	440	200	10,9	19,9	2100	3,6	3,0
24	GDM1-120N244U-30-02	175	13,3	2018	143	500	160	12,2	14,5	3000	3,6	3,0
24	GDM1-120N244U-35-02	150	15	1727	139	550	150	13,2	12,6	3500	3,6	3,0

2.4. Dimensional drawings

2.4.1. GDM1-075..44U-..

Size IM B14

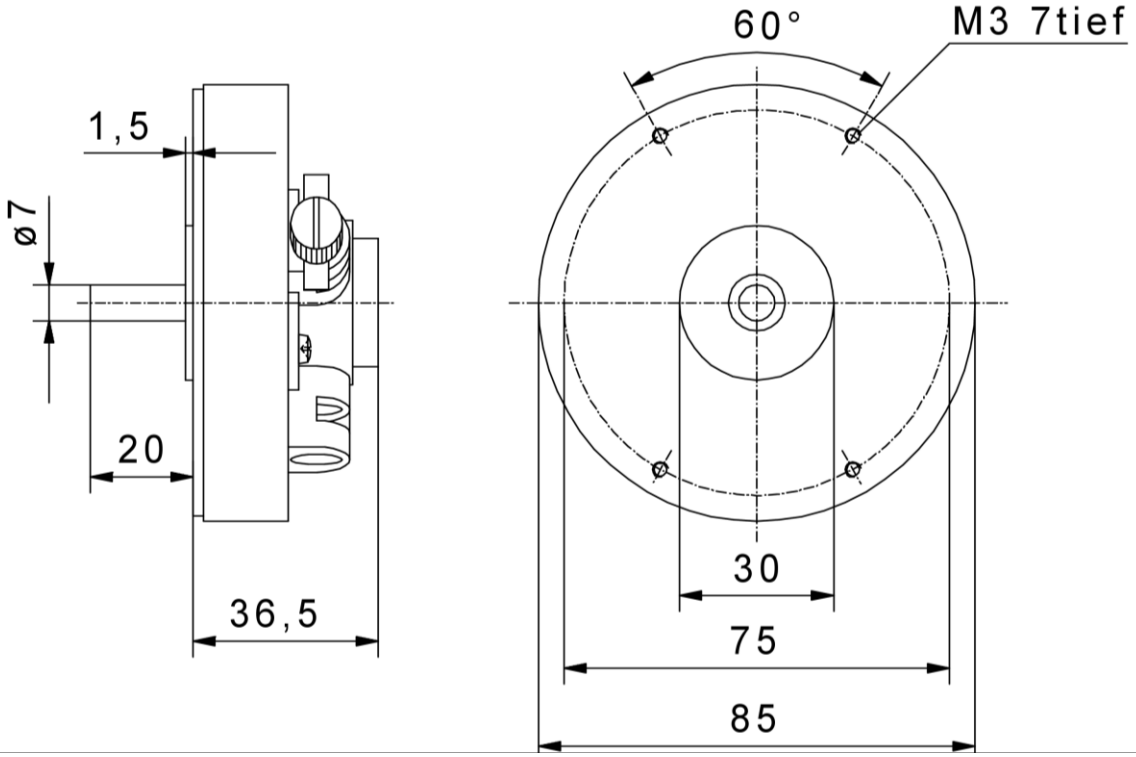

2.4.2. GDM1-080..44U-..

Size IM B14

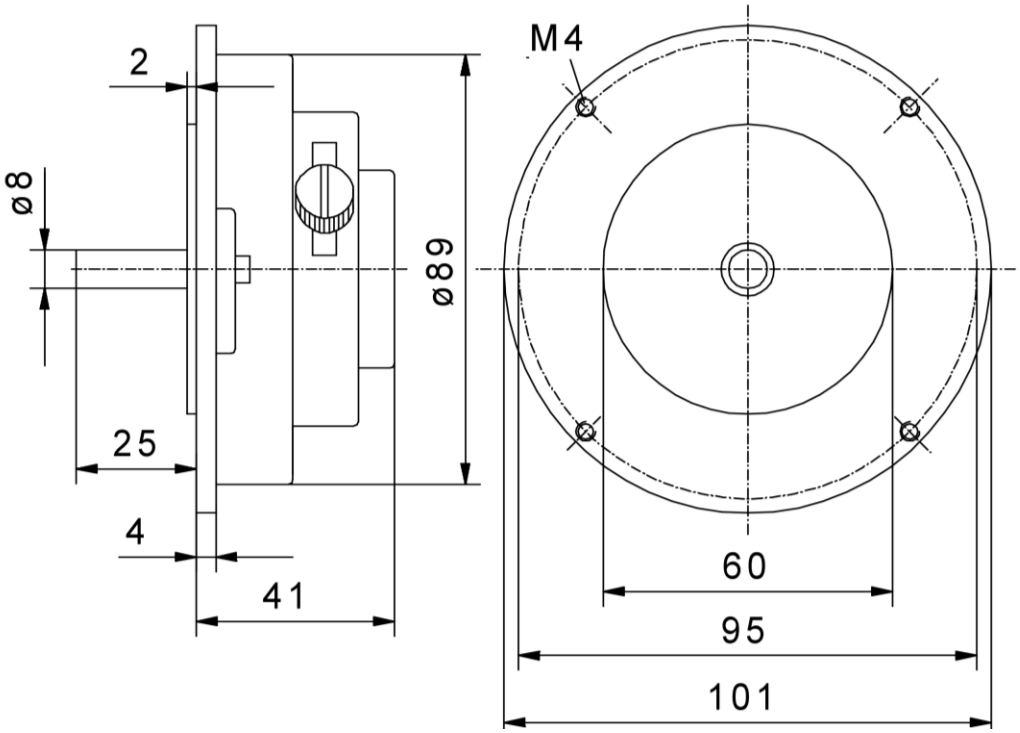

2.4.3. GDM1-009F144U-..

Size IM B14

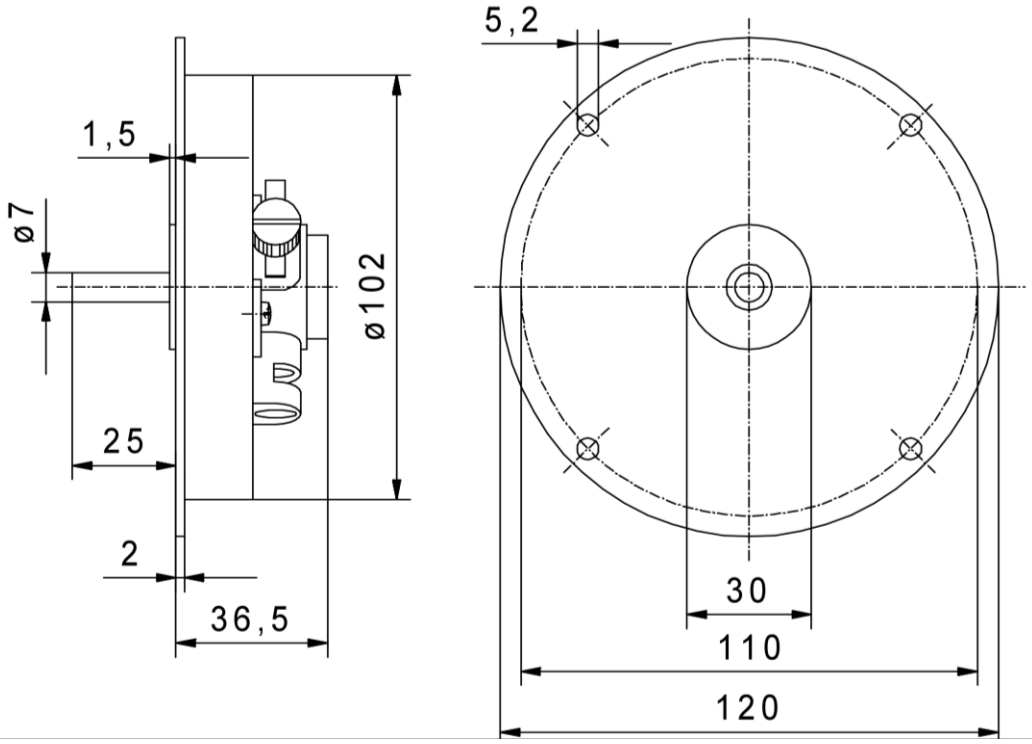

2.4.4. GDM1-010N.44U-..

Size IM B14

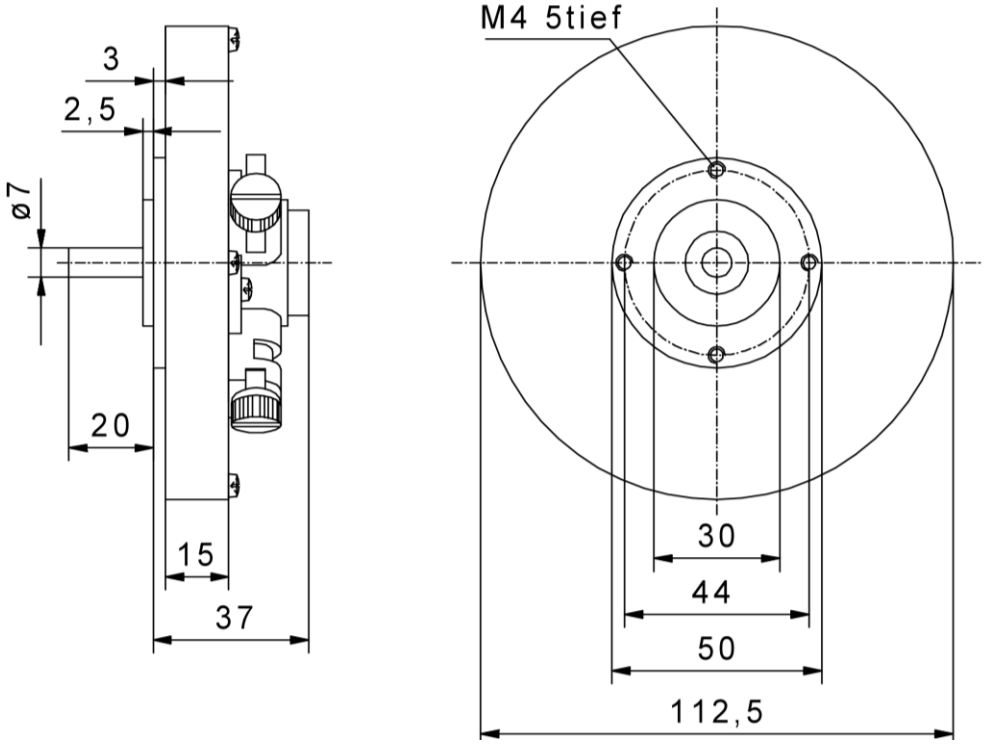

2.4.5. GDM1-100N.44U-..

Size IM B14

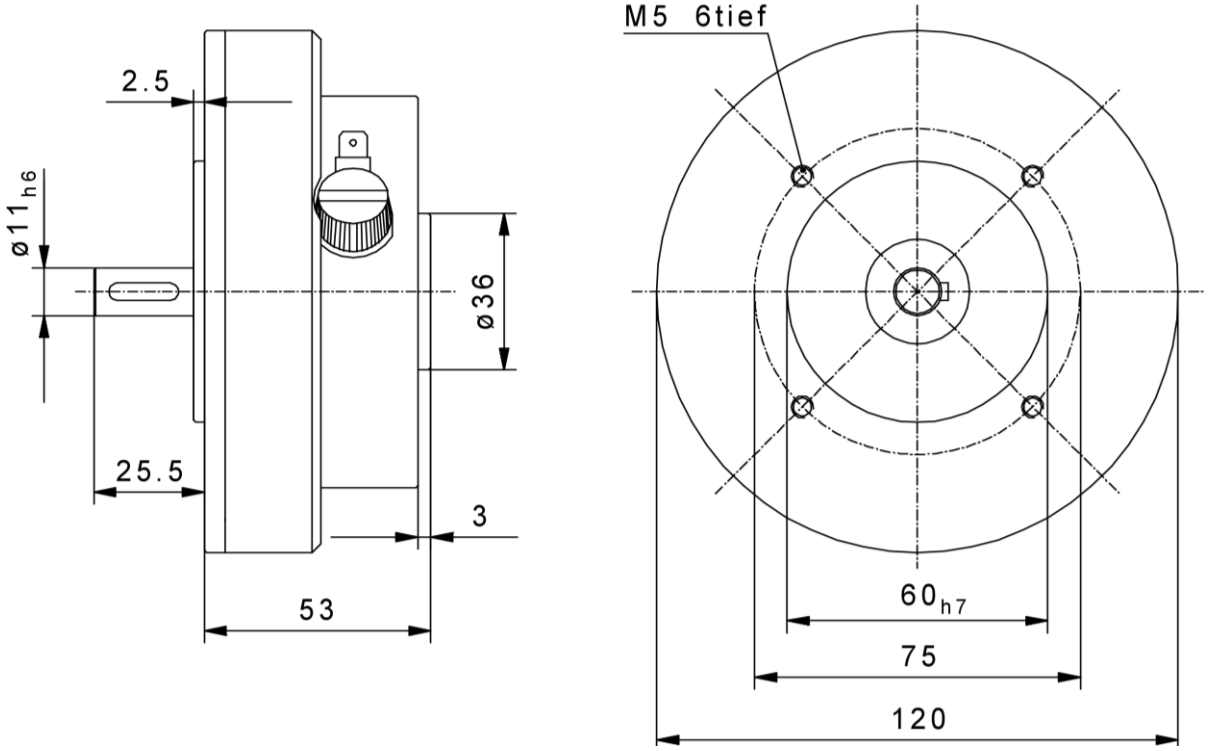

2.4.6. GDM1-012.144U-..

Size IM B14

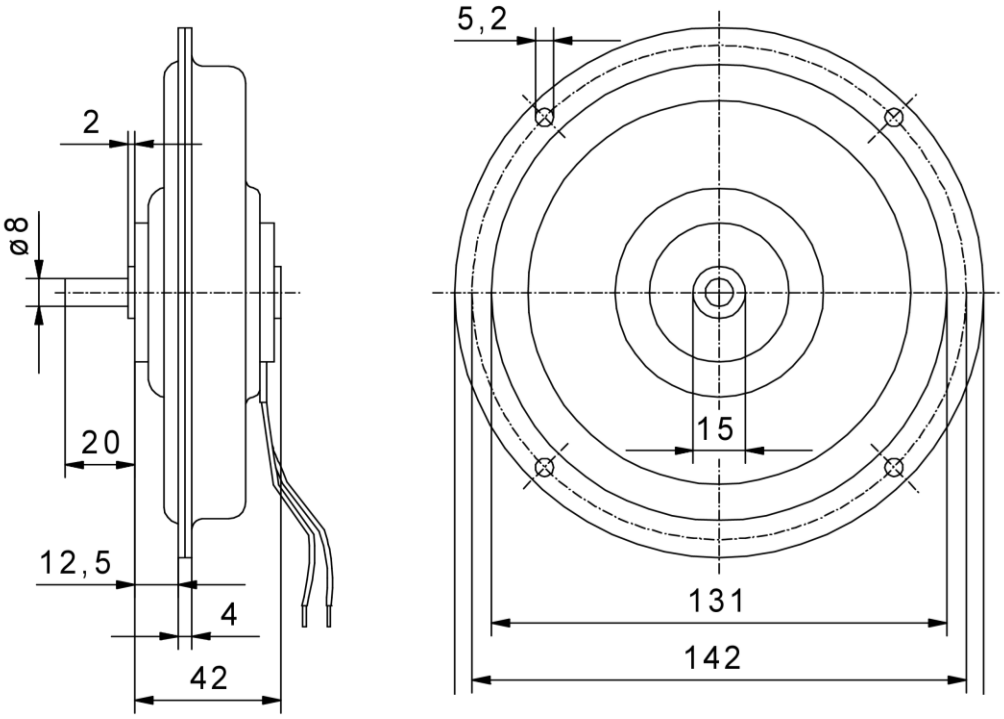

2.4.7. GDM1-120..44U-..

Size IM B14

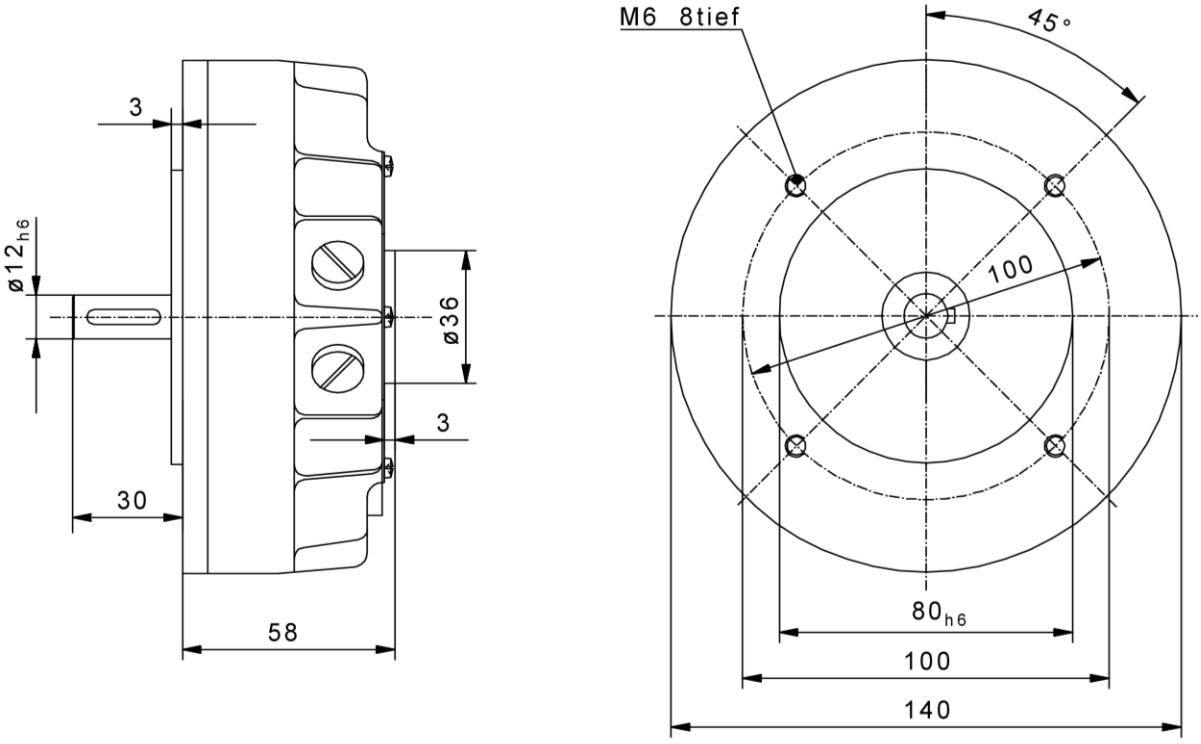

2.5. Holding brake GDM1

The GDM1-100/120 motors can be equipped with a holding brake on request. The holding brakes are spring pressure brakes. The brakes work according to the closed circuit current principle i.e. the brake engages when the operating voltage is switched off (or fails). The brakes are dimensioned for an operating voltage of 24 VDC. The technical data of the brake manufacturer apply at room temperature.

Motor type	**GDM1-100**	**GDM1-120**
Minimum static holding torque [Nm] at 120 °C	1	2
Nominal dynamic holding torque [Nm] at 120 °C	0,5	1
Maximum switched energy [J] per braking of n = 3000 min^{-1}	800	1200
Connected values [V] (+6 % / -10 %)	24	24
Power consumption [W]	9	11,5
Moment of inertia [$kgcm^2$]	0,021	0,058
Switching time On [ms] Ventilation with basic air gap	18	23
Switching time Off [ms] Brakes; with basic air gap	12,5	18

All brakes are not safety brakes in the sense that a torque reduction cannot occur due to uncontrollable interference factors. Depending on the application, the relevant accident prevention regulations as well as the basic safety and health requirements of Annex I of the Machinery Directive and the harmonized European standards must be observed.

2.6. Encoder options

2.6.1. DC-Tacho 2225

Specific generator voltage (EMF)	4,3 mV-DC/rpm
Tolerance of the generator voltage (EMF)	± 1%
Load resistance R_L	≥ 25 kΩ
Connection resistance	260 Ω
Average ripple peak-to-peak	7 %
Maximum operating speed	5.000 rpm
Linearity	± 0,2 %
Reversing error	± 0,2 %
Temperature coefficient of EMF	0,02 %/°C
Temperature coefficient of EMF of internal resistance	0,4 %/°C
Rotor moment of inertia J	1,65 gcm²
Working temperature	-30°C…+85°C

2.6.2. Tacho GT5.05

Specific generator voltage (EMF)	10 V-DC / 10001/min
Tolerance of the generator voltage (EMF)	±5%
Load resistance R_L 0-3000 rpm	≥ 20 kΩ
Connection resistance	430 Ω
Average ripple peak-to-peak	≤ 0,7 %
Maximum operating speed	10.000 rpm
Linearity	≤ 0,15 %
Reversing error	≤ 0,1 %
Temperature coefficient of EMF	±0,005 %/K
Temperature coefficient of EMF of internal resistance	0,039 K^{-1}
Rotor moment of inertia J	50 gcm²
Working temperature	-30°C…+130°C
Shock according to DIN EN 60068-2-27 (6 ms)	100 g
Vibration according to DIN EN 60068-2-6 (10-2000 Hz)	10 g

2.6.3. Tacho GHTS406

Specific generator voltage (EMF)	6 V/1000 min-1
Tolerance of the generator voltage (EMF)	+-3 %
Load resistance R_L 0-3000 rpm	1800 Ohm
Connection resistance	25 Ohm
Average ripple peak-to-peak	1 %
Maximum operating speed	8000 min-1
Linearity	-
Reversing error	0,3 %
Temperature coefficient of EMF	0,03 %/K
Temperature coefficient of EMF of internal resistance	0,004 %/K
Rotor moment of inertia J	1500 gcm²
Working temperature	10…..40°C

2.6.4. Incremental encoder RM36

Nominal voltage	5 V ± 10%
Rated current	35 mA
Increments/revolution	512, 1024, 2048
Linearity	1%
Maximum operating speed	30.000 rpm
Working temperature	-40°C…125°C
Degree of protection	IP64*
Shock according to DIN EN 60068-2-27 (6 ms)	1000 m/s²
Vibration according to DIN EN 60068-2-6 (55-2000 Hz)	100 m/s²
Humidity, non-condensing (IEC61010-1)	max 80%

3. Alternating current – disc motors DSM1

The Baumüller three-phase disc motors are brushless permanent magnet motors with ironless and iron-core motor winding. Brushless disc motors are available for applications in which collector-based DC drives with carbon brucshes are not suitable..

3.1. General technical data

Type	IM B14	Mounting position horizontal, according to EN 60034-7
	IM V18	Mounting position vertical, shaft end down, according to EN 60034-7
	IM V19	Mounting position vertical, shaft end upwards, according to EN 60034-7
Degree of protection	IP44	Housing without considering the shaft feedthrough, with mounted mating connectors
	IP44	Shaft feedthrough
Connection	Main/encoder connection Temperature sensor	
Temperature sensor	PT1000	Linear temperature sensor for evaluation in the controller
Cooling method	IC 410	Surface cooled without fan
Heating	$\Delta\vartheta$ = 105 K	Insulation material class F according to EN 60034
Environmental temperature In operation	Class 3K3/3Z12 acc.to DIN EN 60721-3-3:1995,but temperature range 0-40 °C	Corresponds to 0 to 40 °C at 5 % to 85 % rel. humidity and an absolute humidity of 1 g/m³ to 25 g/m³ and an installation altitude up to 1400 m.
Storage	Class 1K4/1M1 acc. to DIN EN 60721-3-1:1995	
Transport	Class 2K3/2M2 acc. to DIN EN 60721-3-2:1995	
Surface	Unvarnished	DSM1-115-150
Bearingr	A-side	Standard: Ball bearing
Bearing service life	L_{10H} 20.000 h	Standard value; rolling bearing with permanent grease lubrication
Vibration quality	A	According to DIN EN60034-14 (VDE 0530-part14):2004-09
	B	On request
Concentricity	N; R	Standard: Normal according to DIN 42955/ Option: Reduced acc. toDIN 42955
Vibration resistant	radial 3 g	10 Hz to 100 Hz acc. to EN 60068-2-6
	axial 0,5 g	10 Hz to 100 Hz acc. to EN 60068-2-6
Shaft end	Cvlindrical	Smooth acc. to DIN 748: also available with feather kev DIN 6885 Centering with internal thread acc. to DIN 332 form D
Holding brake	Spring pressure brake	Optional on request
Actual speed encoder	Resolver	Standard – see Chapter 3.6
	Encoder options	See Chapter 3.6
Approvals	CE	Standard

3.2. Type key

DSM1-XXXXXXXX-XX-XX-XXX-XXX-X-XX-X-XXX	**Type**
DSM1-**XXX**XXXXX-XX-XX-XXX-XXX-X-XX-X-XXX	**Size** 115 117 150
DSM1-XXX**XX**XXX-XX-XX-XXX-XXX-X-XX-X-XXX	**Magnet system** N1 N2
DSM1-XXXXX**XX**X-XX-XX-XXX-XXX-X-XX-X-XXX	**Degree of protection** 44 – degree of protection IP44
DSM1-XXXXXXX**X**-XX-XX-XXX-XXX-X-XX-X-XXX	**Cooling type** U - Without fan
DSM1-XXXXXXXX-**XX**-XX-XXX-XXX-X-XX-X-XXX	**Rated speed class** 05 - 500 1/min 07 - 700 1/min 10 - 1000 1/min 16 - 1600 1/min 30 - 3000 1/min
DSM1-XXXXXXXX-XX-**XX**-XXX-XXX-X-XX-X-XXX	**U DC link_ DC** 01 – 12 V 02 – 24 V 05 – 48 V 31 – 310 V 54 – 540 V
DSM1-XXXXXXXX-XX-XX-**X**XX-XXX-X-XX-X-XXX	**Encoder type** O – without encoder A – Resolver D – SRS50 E – SRM50 P – RMB28 R – SKS36 T – SKM36
DSM1-XXXXXXXX-XX-XX-X**X**X-XXX-X-XX-X-XXX	**Brake** O – without brake B – with PE brake
DSM1-XXXXXXXX-XX-XX-XX**X**-XXX-X-XX-X-XXX	**Shaft options** A – smooth shaft B – with feather key

DSM1-XXXXXXXX-XX-XX-XXX-**X**XX-X-XX-X-XXX	**Main connection type** B – speedtec device socket (PT1000 on main connection) D – speedtec device socket (PT1000 on encoder socket) k – Cable gland with cable, power and signal line (if available)
DSM1-XXXXXXXX-XX-XX-XXX-X**X**X-X-XX-X-XXX	**Outlet main connection** R - Radial
DSM1-XXXXXXXX-XX-XX-XXX-XX**X**-X-XX-X-XXX	**Outlet encoder connection** R - Radial
DSM1-XXXXXXXX-XX-XX-XXX-XXX-**X**-XX-X-XXX	**Bearing** K – Ball bearing
DSM1-XXXXXXXX-XX-XX-XXX-XXX-X-**X**X-X-XXX	**Vibration quality** A – Vibration quality A B – Vibration quality B
DSM1-XXXXXXXX-XX-XX-XXX-XXX-X-X**X**-X-XXX	**Concentricity** N - Normal R - Reduced
DSM1-XXXXXXXX-XX-XX-XXX-XXX-X-XX-**X**-XXX	**Gear unit attachment** O – without gear unit attachment A – BPE - gear B – BPEF - Gear C – BPEA - Gear D – BPN - Gear E – BPNA - Gear F – BPNF- Gear
DSM1-XXXXXXXX-XX-XX-XXX-XXX-X-XX-X-**XXX**	**Expanded version** 000 - without special version

Example configurations:
DSM1-080N244U-18-02-OOA-FRR-K-AN-000

3.3. Overview electric data

3.3.1. DSM1-115N144U-..

Rated voltage	Motor type	Standstill torque	Standstill current	max. standstill torque	max. standstill current	Rated power	Rated torque	Rated current	Voltage constant	Speed	Rotor torque of inertia (motor)	Weight
U		M_0	I_0	$M_{0,max}$	$I_{0,max}$	P_N	M_N	I_N	$K_{E/cold}$	n_N	J	m
V DC		Nm	A	Nm	A	W	Nm	A	$V/_{1000\ min^{-1}}$	min^{-1}	$kgcm^2$	kg
24	DSM1-115N144U-30-02	1,4	23	3,6	60	380	1,2	20	6,7	3000	10	3,2
48	DSM1-115N144U-30-04	1,4	12	3,6	30	380	1,2	10	13,4	3000	10	3,2

3.3.2. DSM1-117N144U-..

Rated voltage	Motor type	Standstill torque	Standstill current	max. standstill torque	max. standstill current	Rated power	Rated torque	Rated current	Voltage constant	Speed	Rotor torque of inertia (motor)	Weight
U		M_0	I_0	$M_{0,max}$	$I_{0,max}$	P_N	M_N	I_N	$K_{E/cold}$	n_N	J	m
V DC		Nm	A	Nm	A	W	Nm	A	$V/_{1000\ min^{-1}}$	min^{-1}	$kgcm^2$	kg
27	DSM1-117N144U-22-03	2,5	35	10	140	460	2	28	6,4	2200	10	7,6
48	DSM1-117N144U-05-05	5,5	12,9	21	50	262	5	11,7	26,7	500	10	7,6
48	DSM1-117N144U-25-05	3,5	18,9	19	104	759	2,9	15,8	12,4	2500	10	7,6
310	DSM1-117N144U-30-31	3,0	4,2	19	27	785	2,5	3,5	49,8	3000	10	7,6

3.3.3. DSM1-150N144U-..

Rated voltage	Motor type	Standstill torque	Standstill current	max. standstill torque	max. standstill current	Rated power	Rated torque	Rated current	Voltage constant	Speed	Rotor torque of inertia (motor)	Weight
U		M_0	I_0	$M_{0,max}$	$I_{0,max}$	P_N	M_N	I_N	$K_{E/cold}$	n_N	J	m
V DC		Nm	A	Nm	A	W	Nm	A	$V/_{1000\ min^{-1}}$	min^{-1}	$kgcm^2$	kg
12	DSM1-150N144U-05-01	20	165	30	250	1040	18	150	7,3	550	40	12
24	DSM1-150N144U-03-02	30	103	64	220	790	25	86	22	300	40	12
48	DSM1-150N144U-10-05	18	54	40	112	1571	15	43,5	22	1000	40	12
310	DSM1-150N144U-07-31	13	13,2	36	13	870	11,8	4,2	311	700	40	12
310	DSM1-150N144U-30-31	8	10,2	23	28	2260	7,2	9,1	97	3000	40	12
540	DSM1-150N144U-30-54	15	9,7	30	19	2260	7,2	5,2	98	3000	40	12

4. Dimensional drawings

4.1.1. DSM1-115N144U-..

Size IM B14

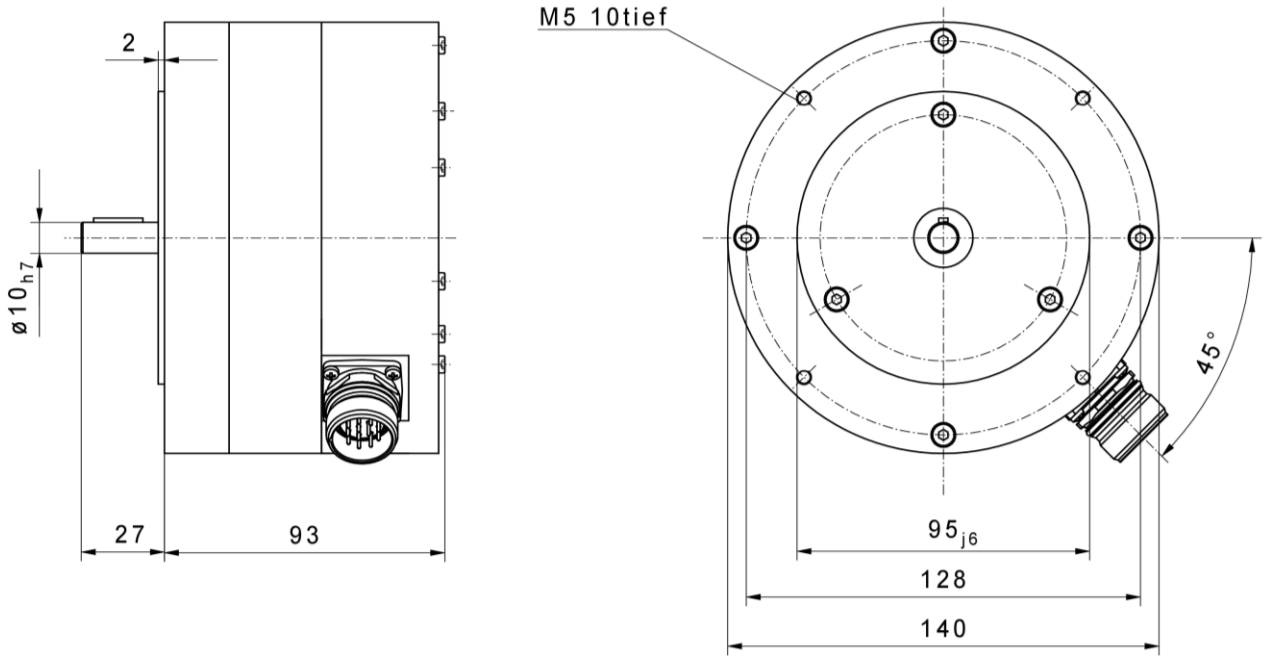

4.1.2. DSM1-117N144U-..

Size IM B14

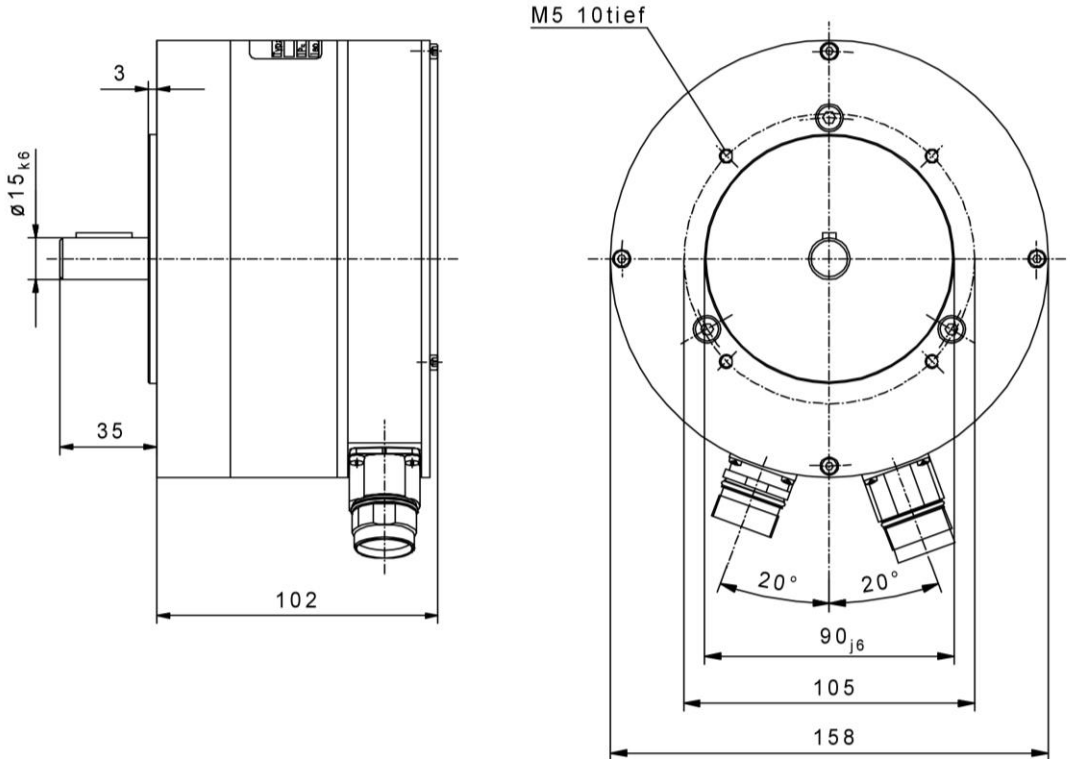

4.1.3. DSM1-150N144U-..

Size IM B14

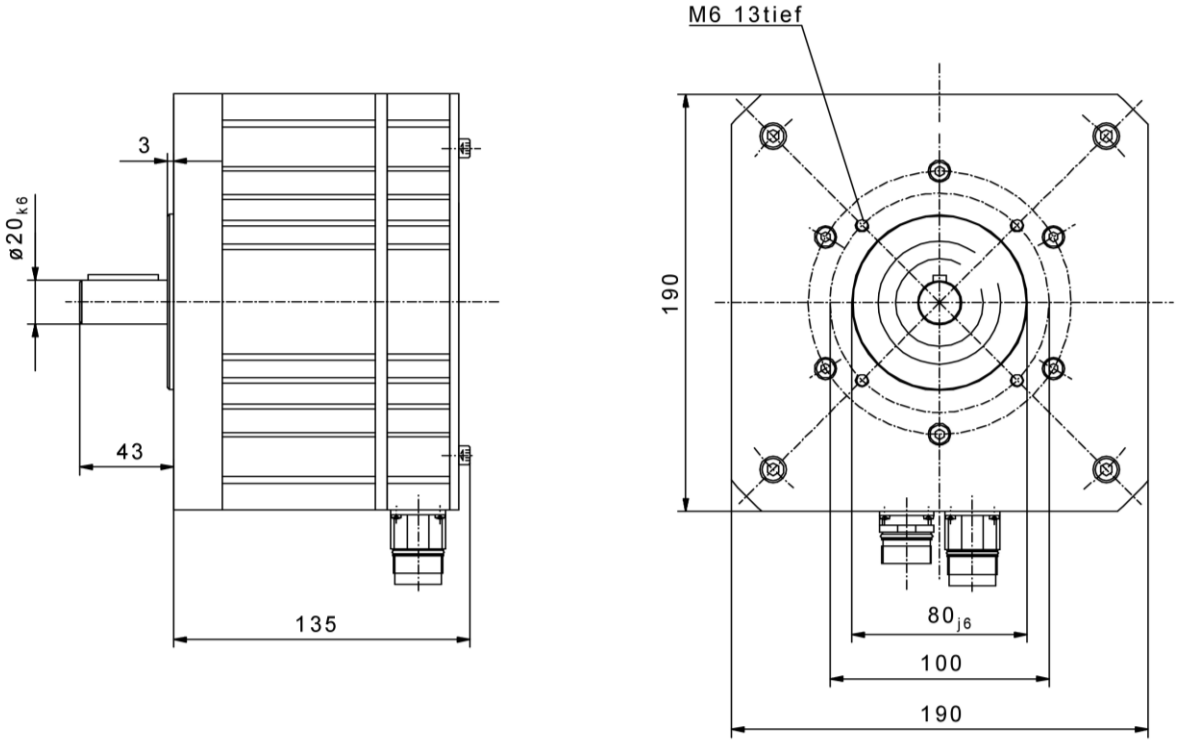

4.2. Encoder options

4.2.1. Resolver

Number of pole pairs	1
Transmission ratio	0,5 ± 0,05
Frequency	5 kHz
Rated input voltage	7 V_{rms}
Active input power at open circuit	33 mW
Power consumption at open circuit	58 mA
Max. output voltage at open circuit	3,5 V ± 10%
Voltage constant	61 mV/°
Rotor resistance	40 Ω ± 10%
Stator resistance	102 Ω ± 10%
Rotor impedance at open circuit	75 + j 100 Ω ± 15%
Rotor impedance at short circuit	70 + j 85 Ω ± 15%
Stator impedance at open circuit with a minimum coupling	180 + j 230 Ω ± 15%
Stator impedance at short circuit and maximum coupling	170 + j 200 Ω ± 15%
Phase shift	8° ± 3°
Zero voltage	30 mV
Angular error referring to $(\Delta\varphi_{max}+\Delta\varphi_{min})/2$	± 10’
Shock according to DIN EN 60068-2-27 (11 ms)	≤ 1000 m/s²
Vibration according to DIN EN 60068-2-6	≤ 500 m/s² (10-500 Hz)

Resolver connection

	Pin	Signal	Option on assignment of PT1000 (R1/R2) on encoder socket
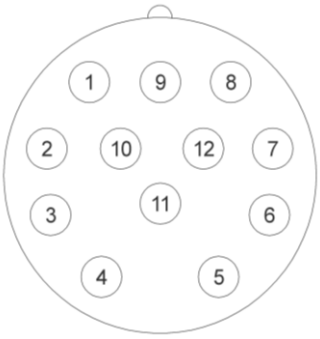	1	cos -	cos -
	2	-	-
	3	-	-
	4	-	-
	5	sin -	sin -
	6	sin +	sin +
	7	-	R2
	8	cos +	cos +
	9	-	R1
	10	ref +	ref +
	11	-	-
	12	ref -	ref -

View on contact side of the device socket

NOTE:
Use only for low requirements on the concentricity of the motor.
The technical data are specifications of the encoder manufacturer.

4.2.2. SINCOS SKS/SKM36 and SRS/SRM50 (Co. SICK)

	SKS36	SKM36	SRS50	SRM50
Number of sine, cosine periods per revolution	128		1.024	
Number of steps per revolution	4.096		32.768	
Number of absolute resolved revolutions	1	4.096	1	4.096
Code type for the absolute value	binär		binär	
Output frequency of sine and cosine signals;	0-65 kHz		0-200 kHz	
Error limits for evaluation of sine and cosine signals; integral non-linearity	+/- 80“		+/- 45“	
Non-linearity within a sine, cosine period; differential non-linearity	+/- 40“		+/- 7“	
Operating speed up to which the absolute position can be generated	6.000 1/min		6.000 1/min	
Maximum operating speed	12.000 1/min		12.000 1/min	
Ouput signals; 2x90° offset sinusoidal signals	1 V_{ss}		1 V_{ss}	
Output signal	serial RS 485, asynchronous, half duplex		serial RS 485, asynchronous, half duplex	
Operating voltage range	7-12 V		7-12 V	
Operating current without load	60 mA		80 mA	
Shock according to DIN EN 60068-2-27	980 m/s² (6 ms)		980 m/s² (10 ms)	
Vibration according to DIN EN 60068-2-6 (10-2000 Hz)	490 m/s²		196 m/s²	

SKS/SKM36 und SRS/SRM50 connection

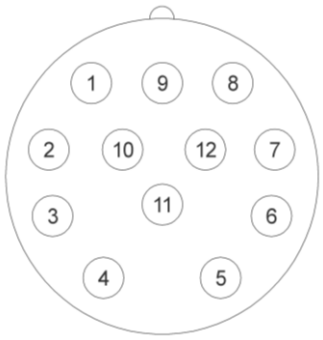

Pin	Signal	Option on assignment of PT1000 (R1/R2) on encoder socket
1	cos -	cos -
2	+ 485	+ 485
3	-	R1
4	-	R2
5	sin +	sin +
6	sin -	sin -
7	- 485	- 485
8	cos +	cos +
9	-	-
10	GND	GND
11	-	-
12	+ U	+ U

View on contact side of the device socket

NOTE:
This encoder is an ESD sensitive part.
The technical data are specifications of the encoder manufacturer.

4.2.3. Incremental encoder RMB28

Rated voltage	5 V ± 10%
Rated current	30 mA
Incrementals / revolutions	512, 1024, 2048
RLG-periods per revolution, motor-dependent	6, 12, 16
Maximum operating speed	30.000 rpm
Working temperature	-40°C…105°C

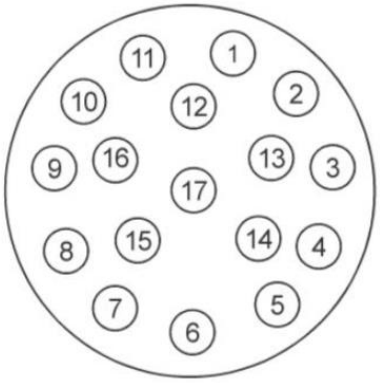

Pin	Signal	
1	-	-
2	+5V	
3	GND	
4	-	
5	Increments A/	
6	Increments A	
7	Increments B/	
8	Increments B	
9	Increments Ref/	
10	Increments Ref	
11	-	
12	RLG U	
13	-	
14	RLG V	
15	-	
16	RLG W	

View on contact side of the device socket

5. Cables and connection technology

For all encoder systems a pre-assembled and trailing-type encoder cable are used. The connection on the motor side consists of a 12-pole signal circular connector for resolvers and Hiperface® encoders from the company SICK. The controller-sided connection consists of a 26-pin sub-D plug. The signal circular connector on the motor side is available in the speedtec version.

5.1.1. Technical data

Technical description –trailing-type for resolvers

- Li9YC, 1 x (2 x 0,25) + Li9Y, 2 x (2x0,25) + Li9YC11Y, 1 x (2 x 0,34), copper strand, twisted in pairs
- Housing PUR, green: labeling with Baumüller Nürnberg and encoder line resolver
- 1st side: 12-pole signal round plug with 12 socket contacts
- 2nd side: 26-pole sub-D-connector with pin contact and locking screws 4-40UNC
- Outer diameter 7.3 mm (+/- 0,3mm)
- Bending radius: r ≥ 4 x D (static), r ≥ 10 x D (dynamic)

Technical description – trailing-type for SinCos Hiperface®- interface and SinCos – and rectangular incremental encoder

- Li9YC, 3 x (2 x 0,25) , + Li9Y, 3 x (2 x 0,25) + Li9YC11Y, 1 x (2x0,34), copper strand, twisted in pairs
- Housing PUR, green; labeling with Baumüller Nürnberg – encoder line Hiperface® or incremental encoder
- 1st side: 12-pole signal round plug with 12 socket contacts
- 2nd side: 26-pole sub-D-connector with pin contact and locking screws 4-40UNC
- Outer diameter 9,6 mm (+/- 0,3mm)
- Bending radius: r ≥ 4 x D (static), r ≥ 10 x D (dynamic)

5.1.2. Instructions for use

Operating temperature encoder line resolver; SinCos Hiperface®-interface; as well as SinCos-and rectangular incremental encoder

Limit temperature	At the surface
Storage temperature	- 40 °C to + 80 °C
Permanently moved application	- 20 °C to + 60 °C

Laying the cable to the motor

The cables must not touch the motor surface.

5.1.3. Order information for encoder cables for b maXX 5000

Encoder cables – pre-assembled cables with connector

For resolvers

Length [m]	Part No. (Speed Tec)
1	448746
2	448747
3	448748
5	448749
7	448750
10	448751
15	448752
20	448753
25	448754
30	448755
35	448756
40	448757
50	448758
75	448759

For SinCos Hiperface®-interface

Length [m]	Part No. (Speed Tec)
1	448761
2	448762
3	448763
5	448764
7	448765
10	448766
15	448767
20	448768
25	448769
30	448770
35	448772
40	448773
50	448774
75	448775

5.2. Motor cables

The motor cables are highly flexible, trailing cables with overall shielding. They comply with VDE, UL and CSA regulations. The control cables are integrated as four-star cables. The brake control and the connection of the temperature sensor are led out via the plug of the main connection.
All in all, the small cable cross section, low weight and barrier-free surface make the cables suitable for optimum utilization of cable track. This allows an efficient use of the cables in trailing cables. By the overall shielding with an optical coverage > 85 % it is an EMC uncritical cable.

5.2.1. Technical data

- Resistance of the sheath to media such as cooling lubricants, machines and gear oils
- Abrasion resistance due to specially treated surface in cable carriers and drag chains
- Cable highly flexible, trailing, minimum bending radius for flexible use 12 x D
- Surface of the sheath is non-blocking, silk-matt
- Shield of tinned copper braid with optical coverage of ≥ 85 % it is an EMC uncritical cable
- Insulation of cores made of TPE or polyester, sheath material PUR – halogen-free
- Cable construction CFC and silicone-free
- Behavior in case of fire, flame retardant, halogen free
- Cable color in RAL 1028, melon yellow
- Labeling with Baumüller logo VDE, UL and CSA sign

Rated voltage
- Uo/U 600 / 1000 V (power wires)
- U 24 V DC (control wires)

Wire labeling
- Power wires U, VV, WWW
- Control line pairs colored as star quad in red, white, black,

Assignment of the pairs (observe polarity!):
- rt - sw (brake)
- ws - ge (temperature sensor)

5.2.2. Main connection - plug

Note:
The connector size is determined by the standstill current I_0 of the used motor.
Motors with a standstill current ≤ 20 A are designed with the main connector size 1.
For a standstill current of 20 A < I_0 ≤ 36 A the main connector size 1.5 is used.
Pole diagrams of the main connection sockets with view on the contact side of the device socket:

		Pin	Signal	Color/labeling
Size 1 I_0 ≤ 20 A	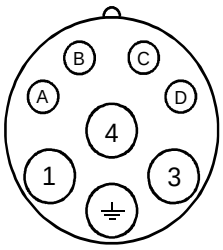	1 ⏚ 3 4 A B C D	Phase U Protective conductor Phase V Phase W B+ B- 1R1 1R2	U Green / yellow V V W W W red black white yellow

		Pin	Signal	Color / labeling
Size 1,5 $I_0 \leq 36$ A	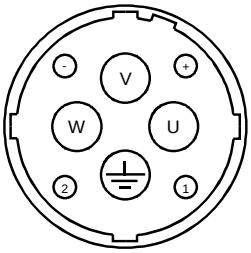	U V W ⏚ + - 1 2	Phase U Phase V Phase W Protective conductor B+ B- 1R1 1R2	U V V W W W Green / yellow red black white yellow

View on contact side of the device socket

Cable interface [2]	Rated current [A][1] [2]	Connector 540 V Size [2]	Cable diameter [2] [mm]
4×1,5 mm² + 4×0,75 mm²	15	1	11,7-12,3
4×2,5 mm² + 4×0,75 mm²	20	1	12,7-14,6
4×4 mm² + 4×0,75 mm²	28	1,5	14,2-15,4
4×6 mm² + 4×0,75 mm²	36	1,5	16,6-17,9
4x10 mm² + 4x0,75 mm²	50	1,5	20,5-21,5
4x16 mm² + 4x0,75 mm²	66	-	23,0-25,8
4x25 mm² + 2x(2x1,5 mm²)	84	-	26,3-29,7
4x35 mm² + 2x(2x1,5 mm²)	104	-	30,8-32,5

[1] Current carrying capacity according to table 5, installation type C or E (VDE 0113 / EN 60 204 part 1 edition 1997)
Environmental temperature 40°C

[2] Different regulations apply for c UL us - approved motors.

5.2.3. Instruction for use

Operating temperature
The cables can be used within a temperature range between -20 °C and +80 °C

Laying the cable at the motor
The cables must not touch the motor surface.

Smallest permissible bending radii
12 x outer diameter of the line.

5.3. Dimensional drawings of device socket and plug

5.3.1. Main connection

Speed Tec – Built-in socket
(Size 1 for current I_0 to 20 A)

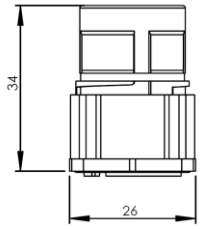

Speed Tec – Mating connector
(Size1 for current I_0 to 20 A)

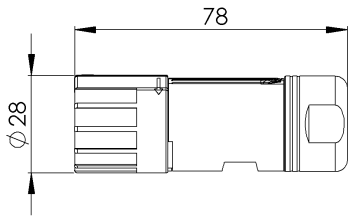

Speed Tec – Built-in socket
(Size 1,5 for current I_0 to 36 A)

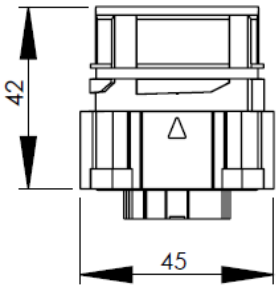

Speed Tec –Mating connector
(Size 1,5 for current I_0 to 36 A)

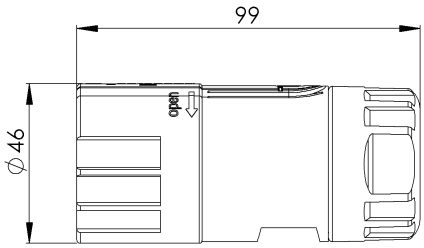

5.3.2. Encoder connection

Speed Tec – Built-in socket

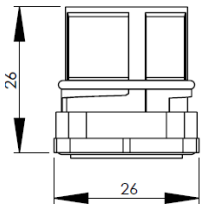

Speed Tec – Mating connector

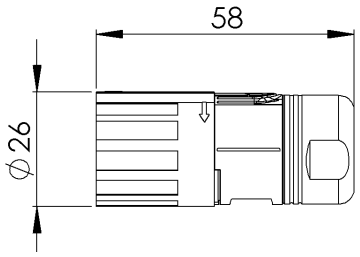

5.4. Temperature sensor

The temperature sensor is connected via the main connection. As an option, the connection is possible for DSM1 motors via the encoder box. The respective version must be identified in the order key.

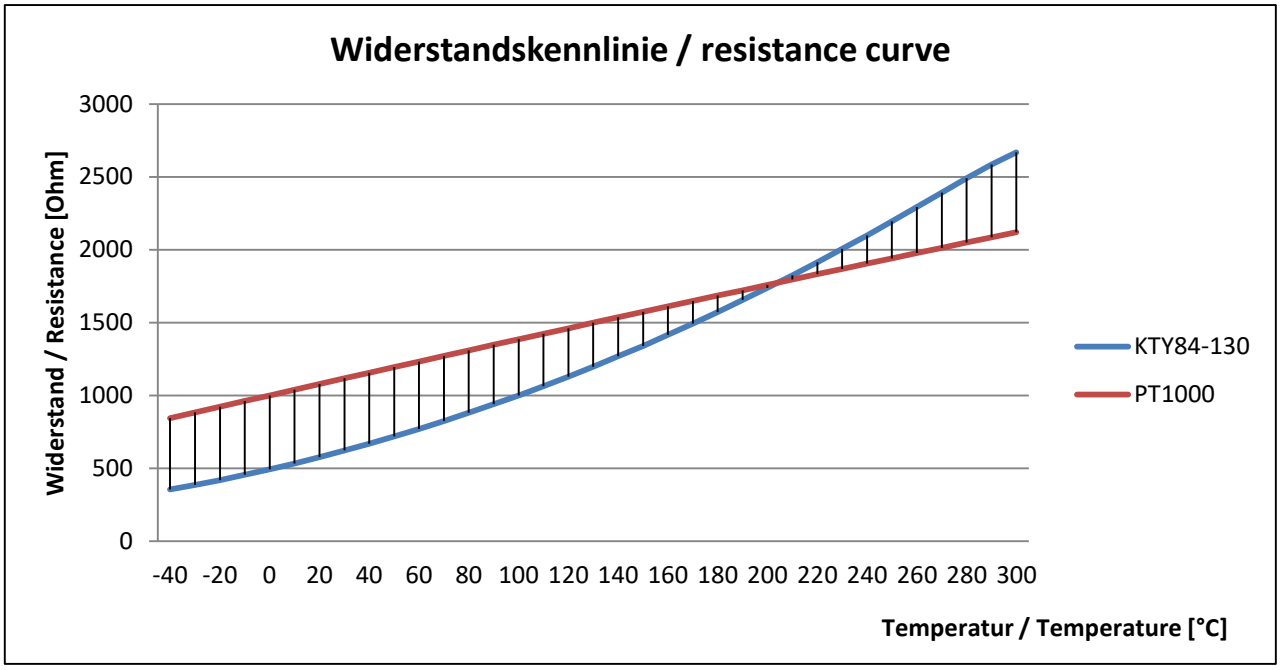

The PT1000 temperature sensor is used to continuously monitor the motor temperature. When the sensor is supplied with a measuring current of 2A, the above resistance curve is shown.

6. Operating manual with safety instructions

For commissioning the motors, please request our corresponding operating instruction with safety instructions.

Motor	Commissioning and maintenance instructions
GDM1	TAM No. 00719
DSM1	TA 30018

7. Declaration of Conformity

In this chapter we provide general information on EC directives, the CE mark and on the Declaration of conformity.

7.1. What is an EC Directive

EC directives specify requirements. The guidelines are issued by the appropriate authorities within the EU and are implemented into national law by all EU member states. Thus, the EU directives guarantee free trade within the EU.

An EC directive only contains essential minimum requirements. Find detailed requirements are to be found in the standards referred to in the directive.

7.2. What the CE mark means

a) The CE marking certifies the conformity with all obligations, which the manufacturer has to fulfil referring to the product due to the community directives in which they are to be affixed, is intended

b) The CE marking on industrial products means that the natural or legal person who affixes or is responsible for affixing the product must ensure that the product has community directives for complete harmonization and to comply with the regulatory requirements.

Council Decision 93/465/EWG, Appendix I B. a) + c)

The CE mark is affixed to the device and to the documentation as soon as we have determined that the device is in good condition and the relevant guidelines have been fulfilled.

If this Baumüller product is used in your total machine you can assume that the product meets the requirements of 2006/95/EG.

The electromagnetic compatibility of the products described in this catalog is mainly ensured by their proper and professional installation. Compliance with the EMC (89/336/EWG) therefore is always the responsibility of the system manufacturer. Please also observe the notes in our technical instructions.

Please also observe the binding national, local and system-specific regulations.

In order to be able to distribute your machine within the EU, the following must be available:

- Mark of conformity (CE - mark)
- Declaration(s) of conformity with regard to the directive(s) relevant for the machine

7.3. Definition of the term Declaration of Conformity

A declaration of conformity within the meaning of this documentation is a declaration that the product in circulation conforms to all relevant basic safety and health requirements of electrical equipment.

With the declaration of conformity in this chapter Baumüller Nürnberg GmbH declares that the product complies with the relevant basic health and safety requirements resulting from the directives and standards listed in the declaration of conformity.

7.4. EU – Declaration of Conformity

7.4.1. Motor series GDM1

BAUMÜLLER

EU-Konformitätserklärung
gemäß

- **Richtlinie 2014/35/EU (Niederspannungsrichtlinie)**

  Richtlinie 2014/30/EU (EMV-Richtlinie)

  Richtlinie 2011/65/EU (RoHS-Richtlinie)

Hersteller

Baumüller DirectMotion GmbH
Flugplatzweg 2
37581 Bad Gandersheim
Deutschland
Tel. +49 5382 9805 - 0
Fax: +49 5382 9805- 55
E-Mail: mail@baumueller.com
Internet: www.baumueller.com

Hiermit erklären wir, dass die nachfolgend genannten Produkte aufgrund ihrer Konzeption, Konstruktion und Bauart in der von uns in Verkehr gebrachten Ausführung den Anforderungen der oben genannten Richtlinien einschließlich der zum Zeitpunkt der Erklärung geltenden Änderungen entsprechen.

Hinweise:

1. Bei Umbau oder Änderungen am Produkt verliert diese Erklärung mit sofortiger Wirkung ihre Gültigkeit.

2. Diese Erklärung bescheinigt die Übereinstimmung mit der genannten Richtlinie, stellt aber keine Zusicherung von darüber hinaus gehenden Produkteigenschaften dar.

3. Diese Konformitätserklärung wird unter der alleinigen Verantwortung des Herstellers ausgestellt.

Angewandte harmonisierte Normen:

- EN 60034-1:2010 + Cor.:2010
  Drehende elektrische Maschinen – Teil 1:
  Bemessung und Betriebsverhalten
- EN 60034-5:2001 + A1:2007
  Drehende elektrische Maschinen – Teil 5:
  Schutzarten aufgrund der Gesamtkonstruktion von drehenden elektrischen Maschinen (IP-Code) – Einteilung
- EN 60034-6:1993
  Drehende elektrische Maschinen – Teil 6:
  Einteilung der Kühlverfahren (IC-Code)

(Wird fortgesetzt auf der nächsten Seite ...)

FM_0009, Version 3.0 Seite 1 von 2

EU-Declaration of Conformity
according

- **Directive 2014/35/EU (Low-voltage-directive)**

  Directive 2014/30/EU (EMC-directive)

  Directive 2011/65/EU (RoHS-directive)

Manufacturer

Baumüller DirectMotion GmbH
Flugplatzweg 2
37581 Bad Gandersheim
Deutschland
Tel. +49 5382 9805 - 0
Fax: +49 5382 9805- 55
E-Mail: mail@baumueller.com
Internet: www.baumueller.com

We declare, that the products referred to in the following conform in their concept, construction and design as lauched by us to the above mentioned directives and their respective changes which were valid at the point of declaration.

Notes:

1. By modifying or alternating the device(s) this declaration immediately becomes invalid.

2. This declaration confirms the compliance with the directive listed, but it is no covenant of any further product properties.

3. This declaration of conformity is issued under the sole responsibility of the manufacturer.

Applied harmonised standards:

- EN 60034-1:2010 + Cor.:2010
  Rotating electrical machines – Part 1:
  Rating and performance
- EN 60034-5:2001 + A1:2007
  Rotating electrical machines – Part 5:
  Degree of protection provided by the integral design of rotating electrical machines (IP-Code) – Classification
- EN 60034-6:1993
  Rotating electrical machines – Part 6:
  Methods of cooling (IC-Code)

(To be continued on the next page ...)

(... Fortsetzung von der vorherigen Seite)

- EN 60204-1:2018
  Sicherheit von Maschinen - Elektrische Ausrüstung von Maschinen - Teil 1:
  Allgemeine Anforderungen

(... continued from the previous page)

- EN 60204-1:2018
  Safety of machinery - Electrical equipment of machines - Part 1:
  General requirements

Markenname: Baumüller
Produktbezeichnung: Gleichstromstrommotor

Brand Name: Baumüller
Product Name: DC motor

Produkt / Product (x): optionaler Buchstabe / optional character (x, y): alternative Buchstaben oder Zahlen / alternative characters	**Jahr der erstmaligen CE-Kennzeichnung / Year of first CE marking**
GDM1- XXXXXXXX-XX-XX-XXX-XXX-X-XX-X-XXX	**2011**

Nürnberg, 02.10.2019

i.V. Michael Veeh

Entwicklungsleiter Motoren
Manager R&D Motors

Markus Helmreich

Geschäftsführer
Director

7.4.2. Motor series DSM1

BAUMÜLLER

EU-Konformitätserklärung
gemäß

- **Richtlinie 2014/35/EU (Niederspannungsrichtlinie)**

  Richtlinie 2014/30/EU (EMV-Richtlinie)

  Richtlinie 2011/65/EU (RoHS-Richtlinie)

Hersteller

Baumüller DirectMotion GmbH
Flugplatzweg 2
37581 Bad Gandersheim
Deutschland
Tel. +49 5382 9805 - 0
Fax: +49 5382 9805- 55
E-Mail: mail@baumueller.com
Internet: www.baumueller.com

Hiermit erklären wir, dass die nachfolgend genannten Produkte aufgrund ihrer Konzeption, Konstruktion und Bauart in der von uns in Verkehr gebrachten Ausführung den Anforderungen der oben genannten Richtlinien einschließlich der zum Zeitpunkt der Erklärung geltenden Änderungen entsprechen.

Hinweise:

1. Bei Umbau oder Änderungen am Produkt verliert diese Erklärung mit sofortiger Wirkung ihre Gültigkeit.

2. Diese Erklärung bescheinigt die Übereinstimmung mit der genannten Richtlinie, stellt aber keine Zusicherung von darüber hinaus gehenden Produkteigenschaften dar.

3. Diese Konformitätserklärung wird unter der alleinigen Verantwortung des Herstellers ausgestellt.

Angewandte harmonisierte Normen:

- EN 60034-1:2010 + Cor.:2010
  Drehende elektrische Maschinen – Teil 1:
  Bemessung und Betriebsverhalten
- EN 60034-5:2001 + A1:2007
  Drehende elektrische Maschinen – Teil 5:
  Schutzarten aufgrund der Gesamtkonstruktion von drehenden elektrischen Maschinen (IP-Code) – Einteilung
- EN 60034-6:1993
  Drehende elektrische Maschinen – Teil 6:
  Einteilung der Kühlverfahren (IC-Code)

(Wird fortgesetzt auf der nächsten Seite ...)

EU-Declaration of Conformity
according

- **Directive 2014/35/EU (Low-voltage-directive)**

  Directive 2014/30/EU (EMC-directive)

  Directive 2011/65/EU (RoHS-directive)

Manufacturer

Baumüller DirectMotion GmbH
Flugplatzweg 2
37581 Bad Gandersheim
Deutschland
Tel. +49 5382 9805 - 0
Fax: +49 5382 9805- 55
E-Mail: mail@baumueller.com
Internet: www.baumueller.com

We declare, that the products referred to in the following conform in their concept, construction and design as lauched by us to the above mentioned directives and their respective changes which were valid at the point of declaration.

Notes:

1. By modifying or alternating the device(s) this declaration immediately becomes invalid.

2. This declaration confirms the compliance with the directive listed, but it is no covenant of any further product properties.

3. This declaration of conformity is issued under the sole responsibility of the manufacturer.

Applied harmonised standards:

- EN 60034-1:2010 + Cor.:2010
  Rotating electrical machines – Part 1:
  Rating and performance
- EN 60034-5:2001 + A1:2007
  Rotating electrical machines – Part 5:
  Degree of protection provided by the integral design of rotating electrical machines (IP-Code) – Classification
- EN 60034-6:1993
  Rotating electrical machines – Part 6:
  Methods of cooling (IC-Code)

(To be continued on the next page ...)

(... Fortsetzung von der vorherigen Seite)

- EN IEC 60034-14:2018
  Drehende elektrische Maschinen – Teil 14:
  Mechanische Schwingungen von bestimmten Maschinen mit einer Achshöhe von 56 mm und höher – Messung, Bewertung und Grenzwerte der Schwingstärke
- EN 61800-5-1:2007 + A1:2017
  Elektrische Leistungsantriebssysteme mit einstellbarer Drehzahl – Teil 5-1:
  Anforderungen an die Sicherheit – Elektrische, thermische und energetische Anforderungen
- EN 60204-1:2018
  Sicherheit von Maschinen - Elektrische Ausrüstung von Maschinen - Teil 1:
  Allgemeine Anforderungen

(... continued from the previous page)

- EN IEC 60034-14:2018
  Rotating electrical machines – Part 14:
  Mechanical vibration of certain machines with shaft heights 56 mm and higher – Measurement, evaluation and limits of vibration severity
- EN 61800-5-1:2007 + A1:2017
  Adjustable speed electrical power drive systems – Part 5-1:
  Safety requirements – Electrical, thermal and energy
- EN 60204-1:2018
  Safety of machinery - Electrical equipment of machines - Part 1:
  General requirements

Markenname: Baumüller
Produktbezeichnung: Drehstrommotor

Brand Name: Baumüller
Product Name: AC motor

Produkt / Product (x): optionaler Buchstabe / optional character {x, y}: alternative Buchstaben oder Zahlen / alternative characters	**Jahr der erstmaligen CE-Kennzeichnung / Year of first CE marking**
DSM1- XXXXXXXX-XX-XX-XXX-XXX-X-XX-X-XXX	**2011**

Nürnberg, 29.07.2020

i.V. Michael Veeh

Entwicklungsleiter Motoren
Manager R&D Motors

Markus Helmreich

Geschäftsführer
Director

FM_0009, Version 3.0

Headquarters

Baumüller Nürnberg GmbH
Ostendstraße 80–90, 90482 Nürnberg
T: +49 (0) 911 5432-0, F: +49 (0) 911 5432-130
www.baumueller.com

Baumüller Anlagen-Systemtechnik GmbH & Co. KG
Ostendstraße 84, 90482 Nürnberg
T: +49 (0) 911 54408-0, F: +49 (0) 911 54408-769
www.baumueller.com

Baumüller Reparaturwerk GmbH & Co. KG
Andernacher Straße 19, 90411 Nürnberg
T: +49 (0) 911 9552-0, F: +49 (0) 911 9552-999
www.baumueller-services.com

Nürmont Installations GmbH & Co. KG
Am Keuper 14, 90475 Nürnberg
T: +49 (0) 9128 9255-0, F: +49 (0) 9128 9255-222
www.nuermont.com

Subsidiaries

Argentina
Mektron ID S.R.L.
Cochabamba 434, Ciudad Autónoma de Buenos Aires, C1150AAF Buenos Aires, Argentina
T: +54 011 4300-0018

Australia
Baumüller Australia Pty. Ltd.
19 Baker Street, Botany NSW 2019, Sydney
T: +61 2 83350 – 100, F: +61 2 83350 – 169

Austria
Baumüller Austria GmbH
Schärdinger Straße 13, 4061 Pasching
T: +43 (0) 7229 22822-0, F: +43 (0) 7229 22822-32

Brazil
Baumüller Automação (Sales)
R. Padre Guilherme Pompeu, 1, Centro
06501-055 Santana de Parnaíba S.P.
T: +55 11 4115-8277, M: +55 11 98277-4445

Brazil
NC Motores (Service)
R. Iguassú, 42, Vila São Silvestre
CEP 06417-140, Barueri S.P.
T: +55 11 4168-4130, F: +55 11 4168-4144

Canada
Baumueller Canada
6581 Kitimat Road, Unit 8
Mississauga, ON L5N 4J4, Canada
T: +1 905-228-1096, F: +1 905-247-0609

China
Baumüller Automation Equipment Trading (Shanghai) Co., Ltd.
Room 1003 Floor 10th Building C2 Xinjinqiao Rd.1599, Pudong New Zone, Shanghai, China
Tel: +86 21 5031 0336; Fax: + 86 21 5031 6106

China
Baumueller Automation (Suzhou) Co., Ltd.
08/D01, No. 1801 Pangjin Road, Wujiang Economic and Technological Development Zone, 215200 Jiangsu
T: +86 512 6319 3298, F: +86 512 6319 3318

France
Baumüller SARL
6 bis, rue Maryse Bastié, 69500 Bron
T: +33 (0) 4 3724 0900, F: +33 (0) 4 7826 3420

Germany
Sales office Dresden
Baumüller Nürnberg GmbH
Fritz-Reuter-Str. 34a, 01097 Dresden
T: +49 (0) 911 5432-517, F: +49 (0) 911 5432-99518

Germany
Sales office Griesheim
Baumüller Nürnberg GmbH
Frankfurter Str. 74, 64521 Groß-Gerau
T: +49(0)6152-85830-00, F: +49(0)6152 / 85830-20,

Germany
Sales office Langenhagen
Baumüller Nürnberg GmbH
Bohlenweg 10, 30853 Langenhagen
T: +49 (0) 511 771 968 – 0, F: +49 (0) 511 771 968 – 77

Germany
Sales office Nürnberg
Baumüller Nürnberg GmbH
Ostendstraße 80-90, 90482 Nürnberg
T: +49(0)911 5432-501, F: +49(0)911 5432-510

Germany
Sales office Velbert
Baumüller Nürnberg GmbH
Sontumer Str. 18, 42551 Velbert
T: +49 (0) 2051 80858-0 F: +49(0)2051 80858-15

Germany – Freiberg
Nürmont Installations GmbH & Co. KG
Am Junger Löwe Schacht 11, 09599 Freiberg
T: +49 (0) 3731 3084-0, F: +49 (0) 3731 3084-33

Germany – Kamenz
Baumüller Reparaturwerk GmbH & Co. KG
Nordstraße 57, 01917 Kamenz
T: +49 (0) 3578 3406-15, F: +49 (0) 3578 3406-50

Germany – München
Baumüller Reparaturwerk GmbH & Co. KG
Meglingerstraße 58, 81477 München
T: +49 (0) 89 748 898-0, F: +49 (0) 89 748 898-55

Great Britain
Baumüller (UK) Ltd.
Units 2&3, Aurora Stockport, Beacon Way
Stockport, SK3 0EF
T: + 44 (0)161 432 7824, F: + 44(0) 161 432 8493

Greece
ALPHA MOTION S.A.
Marathonos Avenue 72, 190 09 Pikermi, Attica,
T: +30 210 8227 470, F: +30 210 8253 787

India
Baumuller India Pvt. Ltd.
Corporate Office and Works
Laxmi Shantiban, Ground + 1st Floor, Sr. No. 1/5, 1/6, Beside Walnut School, Shivane,
NDA Road, Taluka Haveli, Pune 411023
T: +91-20-25700300

India
Baumuller India Pvt. Ltd. (Regional Office)
Shed No 149, Platinum Industrial Park,
S.L.M Mill Compound, Vatva, Ahmedabad
382440 Gujarat, T: +91 (0) 99740 20860

Israel
SERVI-TECH LTD.
48d HaHaroshet St. Building 34/10,
P.O.B 6371, Ind. Zone Carmiel 2165150
T: +972-4-9589550, F: +972-4-9589551

Italy
Baumüller Italia S.r.l.
Viale Italia 12, 20094 Corsico (Mi)
T: +39 02 45100 – 181, F: +39 02 45100 – 426

Japan
Daiki Rika Kogyo Co., Ltd.
212-8 Akagidai, Kounosu 365-0001 Saitama
T: +81 48 568 2500, F: +81 48 568 2505

Mexico
Baumueller Nuermont S.A. de C.V.
Carretera Estatal 431 km 2+200, Lote 95 Módulo 11
Parque Industrial Tecnológico Innovación CP 76246 El Marqués Querétaro, Mexico
T: +52 (442) 221 6670

Myanmar
Mr. Tom Sale and Service Co., Ltd.
No.117, D3, Bogyoke Road, 10th Block,
Botahtaung Township Yangon, Myanmar
T: +95 9763854860, Fax: +95 9763854861

Netherlands
Baumüller Benelux B.V.
Regenbeemd 6, 4825 AT Breda
T: +31 (0) 76 5717111, F: +31 (0) 76 5871211

Poland
Jarosław Hyla
Area Sales Manager – Poland
Baumüller Nürnberg GmbH
Ostendstraße 80-90, 90482 Nürnberg
T: +48 728 416 444

Poland
KF Domena Sp. z o.o., - sales agent
Ul. Hutnicza 10, 40-241 Katowice,
T: +48 (0) 32 2658096, F: + 48 (0) 32 3602339

Russia
ProSensor
Zavodskaya Street 1B building 2
124365 Moscow, Zelenograd,
T: +7 495 6428 476, F: +7 495 6428 477

Slovenia, Croatia
Baumüller Dravinja d.o.o.
Delavska cesta 10, 3210 Slovenske-Konjice
T: +386 3 75723 – 00, F: +386 3 75723 – 32 / 33

Spain
Baumüller Ibérica S.L.
C/ Italia 6, 28916 Leganés (Madrid)
T: +34 91 685 66 55, F: +34 91 600 08 64

South Africa
Motion Tronic cc
Unit 15, Nutwood Industrial Park
144 Brackenhill Road, 3652 Waterfall
T: +27 31 7011620, F: +27 86 6150597

South Korea
Bomac Systems Inc.
417 Yucheon Factopia, 30,Jeonpa-ro
Manan-gu, Anyang-si ,Gyunggi-do, 14086, South Korea
T: +82 31 467 – 2030, F: +82 31 467 – 2033

South Korea
BMK Co., Ltd
103-906, Ssangyong 3th Buchen Techno park,
397 Seokchen-Ro, Ohjeong-Gu, Buchen-Si
Gyeonggi-do 14449, South Korea
T: +82 32 624-3073, F: +82 32 624-3074

Switzerland
Baumüller Swiss AG
Oberwiesenstrasse 75, 8500 Frauenfeld
T: +41 (0) 52 723 28 – 00, F: +41 (0) 52 723 28 – 01

Thailand
Mr. Tom Sale and Service Co., Ltd.
39/9 Moo 1, Tepkanjana Rd., Tambol Nadee
Amphur Muang, 74000 Samutsakorn
T: +66 34 854932-4, F: +66 34 854935

Turkey
Baumüller Motor Kontrol Sistem San. ve Tic. Ltd. Sti.
Girne Mah., Kücükyali Is Merkezi, B Blok No. 12
Maltepe, 34852 Maltepe – Istanbul
T: +90 216 519 – 9071, F: +90 216 519 – 9072

USA
Baumueller-Nuermont Corp.
1858 S. Elmhurst Road, Mount Prospect, IL 60056
T: +1 847 956-7392, F: +1 847 956-7925

USA
Baumueller-Nuermont Corp.
1555 Oakbrook Drive Suite 120, Norcross, GA 30093
T: +1 678 291-0535, F: +1 678 291-0537

Venezuela, Colombia, Ecuador
Nimbus International
6941 SW 196th Ave, Ste. 22
Fort Lauderdale, FL 33332, USA
T: +1 954 252 9242; F: +1 954 252 5372

be in motion

Responsible for content: **Baumüller Nürnberg GmbH**, Ostendstraße 80–90, 90482 Nürnberg, Phone: +49 (0) 911 5432 – 0, Fax: +49 (0) 911 5432 – 130 **www.baumueller.com**
Baumüller Anlagen-Systemtechnik GmbH & Co. KG, Ostendstr. 84, 90482 Nürnberg, Phone: +49 (0) 911 54408 – 0, Fax: +49 (0) 911 54408 – 769
Baumüller Reparaturwerk GmbH & Co. KG, Andernacher Straße 19, 90411 Nürnberg, Phone: +49 (0) 911 9552 – 0, Fax: +49 (0) 911 9552 – 999

3.357.en.123